TETRAN

T510 Series High Performance Vector Converter

User Manual

SHENZHEN TETRAN ELECTRIC TECHNOLOGY CO. , LTD.

V1.1

Preface

Firstly thank you for purchasing our T510 series converters.

This manual introduces how to use T510 series converter correctly. Before using (installation, operation, maintenance, inspection, etc.), please read this manual carefully. In addition, please understand the safety precautions before using the product.

- In order to illustrate the details of the product, the illustrations in this specification are sometimes in the state of removing the hood or safety cover. When using this product, please be sure to pack the shell or cover according to the regulations, and operate according to the contents of the instructions.
- The illustrations in this manual are for illustration only and may differ from the products you ordered.
- Due to product upgrade or specification change, and in order to improve the convenience and accuracy of the instructions, the contents of the instructions will be changed in time without further notice.
- If you need to order the instructions due to damage or loss, please contact our regional agents or directly contact our customer service center.
- If you still have some unknown problems in use, please contact our customer service center.

CE Mark

The CE mark on the T510 declares that the frequency converter with the European low voltage directive (LVD) and EMC directive.

The T510 series frequency converters complies with the following LVD and EMC directives and standards

Directive	Directive Code	Standard
EMC Directive	2014/30/EU	EN61800-3:2004+A1:2012
LVD Directive	2014/35/EU	EN61800-5-1：2007+A1-2017 EN61010-1:2010

The T510 frequency converter complies with the requirements of standard IEC/EN 61800-3 on the condition of correct installation and use by following the instruction in chapter 7

Content

Chapter I Safety Information and Cautions in Use

Security Definition：

In this manual, safety precautions fall into the following two categories：

Danger: The danger caused by not operating as required may lead to serious injury or even death. ;

Warning: The danger of not operating as required may lead to serious injury or even death.

When installing, debugging and repairing the system, please read this chapter carefully and operate according to the safety precautions required in this chapter. In case of any injury or loss caused by irregular operation, it is irrelevant to our company.

1.1 Security Matters

1.1.1 Before installation:

Danger
● Do not install the control system when it is found that there is water intake, parts are missing or parts are damaged when unpacking the box ● When the packing list does not match the physical name, please do not install it!
Danger
● Handling should be carried lightly, otherwise there is a risk of damage to equipment! ● Frequency converters with damaged drives or missing parts should not be used. The risk of injury! ● Do not touch the components of the control system with your hands, otherwise there is a risk of electrostatic damage!

1.1.2 Installations:

Danger
● Please install it on flame-retardant objects such as metals; stay away from combustibles. Otherwise, it may cause fire alarm! ● Do not unscrew the fixing bolts of equipment components at will, especially those with red marks!
Warning
● Do not let lead head or screw fall into the driver. Otherwise, the driver will be damaged! ● Please install the driver in a place with less vibration and avoid direct sunlight. ● When two or more inverters are placed in the same cabinet, please pay attention to the installation position to ensure the heat dissipation effect.
Danger

- You must follow the instructions of this manual and be constructed by professional electrical engineers, otherwise unexpected dangers will arise.
- There must be a circuit breaker between the frequency converter and the power supply, otherwise fire may occur!
- Before wiring, please make sure that the power supply is in zero energy state, otherwise there is the danger of electric shock!
- According to the standard, the inverter should be grounded correctly and normatively, otherwise there will be electric shock danger.

1.1.3 Wiring:

Danger

- You must follow the instructions of this manual and be constructed by professional electrical engineers, otherwise unexpected dangers will arise.
- Circuit breaker must be separated between frequency converter and power supply, otherwise fire alarm may occur.
- Before wiring, please make sure that the power supply is in zero energy state, otherwise there is the danger of electric shock!
- According to the standard, the inverter should be grounded correctly and normatively, otherwise there will be electric shock danger.

Danger

- The input power must not be connected to the output terminals (U, V, W) of the frequency converter. Pay attention to the marking of the terminal, do not connect the wrong line! Otherwise, the driver will be damaged!
- Ensure that the assigned lines meet the EMC requirements and the regional safety standards. Refer to the manual for the wire diameters used. Otherwise, accidents may occur!
- The braking resistance must not be directly connected to the terminals of DC bus (+), (-). Otherwise it will cause a fire alarm!
- Encoder must use shielding wire, and shielding layer must ensure single-ended reliable grounding!

1.1.4 Before power-on:

Warning

- Make sure that the voltage level of the input power supply is the same as the rated voltage level of the frequency converter; whether the wiring positions of the input terminals (R, S, T) and the output terminals (U, V, W) are correct; and check whether there is short circuit in the peripheral circuit connected with the driver, and whether the connected lines are tight, otherwise causing driver damage!
- No voltage withstand test is required for any part of the frequency converter. The product has been tested at the time of leaving the factory. Otherwise, it will cause accidents!

Danger

- The converter must cover the cover before it can be powered on. Otherwise, it may cause electric shock!
- All wiring of peripheral fittings must follow the instructions of this manual and connect correctly according to the method of circuit connection provided in this manual. Otherwise, it will cause accidents!

1.1.5 After power-on:

Danger
● Do not unclose the cover after power on. Otherwise, there is a danger of electric shock! ● Do not touch the driver and peripheral circuit with wet hands. Otherwise, there is a danger of electric shock! ● Do not touch any input and output terminals of the converter. Otherwise, there is a danger of electric shock! ● At the beginning of power-on, the frequency converter automatically detects the safety of the external high-voltage circuit. At this time, you must not touch the terminal of driver U, V, W or motor, otherwise there is a danger of electric shock!
Danger
● If parameter identification is needed, please pay attention to the danger of injuring people in motor rotation. Otherwise, it may cause accidents! ● Do not change the parameters of the frequency converter manufacturer at will. Otherwise, it may cause damage to the equipment!

1.1.6 In operation:

Danger
● Do not touch the cooling fan and discharge resistance to test the temperature. Otherwise it may cause burns! ● Non-professional technicians should not detect signals in operation. Otherwise, it may cause personal injury or equipment damage! ● During the operation of the frequency converter, something should be avoided falling into the equipment. Otherwise, the equipment will be damaged! ● Do not use the method of contactor interruption to control the start and stop of the driver. Otherwise, the equipment will be damaged!

1.1.7 Maintenance:

Danger
● Do not electrify the equipment for repair and maintenance. Otherwise, there is a danger of electric shock! ● Make sure that the driver can be maintained and repaired only when the voltage of converter is lower than AC36V, whichever is two minutes after power failure. Otherwise, the residual charge on the capacitor will cause harm to people! ● Personnel without professional training should not repair and maintain the converter. Otherwise, it will cause personal injury or equipment damage! ● The parameters must be set after the frequency converter is replaced, and all plug-ins must be plugged in when power is cut off.

1.2 Notes

1.2.1 Insulation inspection of motor

Motor insulation inspection should be done before and during periodic inspection before the first use, long-term storage and reuse of the motor to prevent damage to the frequency converter due to insulation failure of the motor windings. When inspecting the insulation, it is necessary to separate the motor connection from the frequency converter. It is suggested that 500V voltage type megameter be used to ensure that the measured insulation resistance is not less than 5MΩ.

1.2.2 Thermal protection of motor

If the rated capacity of motor and frequency converter does not match, especially when the rated power of frequency converter is greater than the rated power of motor, it is necessary to adjust the parameters of motor protection in frequency converter or install thermal relay in front of motor to protect motor.

1.2.3 Power frequency operation

The frequency converter can provide the output frequency of 0 Hz to 3200 Hz. If the customer needs to run above 50 Hz, please consider the bearing capacity of the mechanical device.

1.2.4 Vibration of mechanical devices

Frequency converter may encounter mechanical resonance point of load device in some output frequency band, which can be avoided by setting jump frequency parameters in frequency converter.

1.2.5 Motor heating and noise

Because the output voltage of the converter is PWM wave and contains certain harmonics, the temperature rise, noise and vibration of the motor will increase slightly compared with the power frequency operation.

1.2.6 Capacitance with varistor or improved power factor on output side

The output of the converter is PWM wave. If the output side is equipped with capacitors to improve the power factor or varistors for lightning protection, it is easy to cause instantaneous overcurrent of the converter or even damage the converter. Please do not use it.

1.2.7 Switching devices such as contactors for input and output of frequency converter

If a contactor is installed between the power supply and the input of the frequency converter,

it is not allowed to use the contactor to control the start and stop of the frequency converter. It is necessary to use the contactor to control the starting and stopping time of the converter, and the interval should not be less than one hour. Frequent charging and discharging can easily reduce the service life of capacitors in frequency converters. If there are contactors and other switching devices between the output end and the motor, it should be ensured that the converter operates on-off without output, otherwise the module in the converter will be damaged easily.

1.2.8 Use other than rated voltage

It is not suitable to use T series converter outside the allowable operating voltage range stipulated in the manual, which can easily cause device damage in the converter. If necessary, please use the corresponding boost or step-down device for pressure change treatment.

1.2.9 Three-phase input changed to two-phase input

Three-phase converter in T series can not be changed to two-phase use. Otherwise, it will lead to failure or damage of frequency converter.

1.2.10 Lightning shock protection

This series of converters are equipped with lightning overcurrent protection device, which has certain self-protection ability for induction lightning. For where lightning occurs frequently , customers should also install protection at the front end of the converter.

1.2.11 Ambient temperature and quota reduction

The normal operating ambient temperature of this series of converters is –10℃ ～40℃, which needs to be degraded when the temperature exceeds 40℃. The ambient temperature is reduced by 1.5% per litre, and the maximum operating temperature is 50℃.

1.2.12 Altitude and derating in use

In the area with altitude over 1000 m, the heat dissipation effect of the converter becomes worse due to the thin air. The converter should be degraded in use. The derating of the converter should be reduced by about 10% for every 1000 m elevation rise.

1.2.13 Some special usages

If customers need to use methods other than the recommended wiring diagram provided in

this manual, such as common DC bus, etc., please consult our company.

1.2.14 Attention to abandonment of frequency converter

The main circuit's electrolytic capacitor and PCB's electrolytic capacitor may explode when burned. Toxic gases are produced when plastic parts are burned. Please treat it as industrial waste.

1.2.15 About adaptation motor

1) The standard adapter motor is four pole squirrel cage induction motor. If it is not the motor mentioned above, please select the frequency converter according to the rated current of the motor. If you need to drive permanent magnet synchronous motor, please consult our company.

2) The cooling fan of non-variable frequency motor is coaxially connected with the rotor shaft. When the speed decreases, the cooling effect of the fan decreases. Therefore, when the motor is overheated, the exhaust fan should be strengthened or replaced by variable frequency motor.

3) Frequency converter has built-in adapted motor with standard parameters. It is necessary to identify motor parameters or modify default values according to the actual situation in order to conform to the actual values as far as possible, otherwise it will affect the operation effect and protection performance

4) Because of the short circuit inside the cable or motor, the frequency converter will give an alarm, even the explosion machine. Therefore, the insulation short-circuit test of the initial installed motor and cable should be carried out first, and it should also be carried out frequently in daily maintenance. Note that the frequency converter must be disconnected from the part under test when doing this test.

Chapter II T510 Series Products Information

2.1 Naming Rules

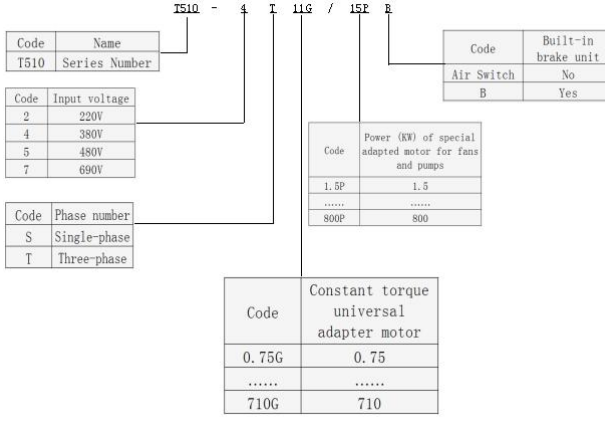

Figure 2-1 Naming Rules

2.2 Nameplate

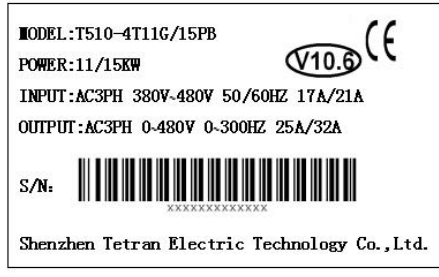

Figure 2-2 Nameplate

2.3 T510 Series Inverter

Table 2-1 T510 Inverter Model and Technical Data

Model	Rated Capacity (KVA)	Rated Input Current(A)	Rated Output Current(A)	Adapted Motor (KW)
Single-phase power supply 200～240V 50/60Hz				
T510-2S0.4B	1	5.4	2.3	0.4
T510-2S0.75B	1.5	8.2	4	0.75
T510-2S1.5B	3	14	7	1.5
T510-2S2.2B	4	23	9.6	2.2
Three-phase power supply 380～480V 50/60Hz				
T510-4T0.75G/1.5PB	1.5/3	3.4/5	2.1/3.8	0.75/1.5
T510-4T1.5G/2.2PB	3/4	5/5.8	3.8/5.1	1.5/2.2
T510-4T2.2G/3.0PB	4/4.9	5.8/8.0	5.1/6.8	2.2/3.0
T510-4T3.0G/4.0PB	4.9/5.9	8.0/10.5	6.8/9.0	3.0/4.0
T510-4T4.0G/5.5PB	5.9/8.9	10.5/14.6	9/13	4.0/5.5
T510-4T5.5G/7.5PB	8.9/11	14.6/20.5	13/17	5.5/7.5
T510-4T7.5G/11PB	11/17	20.5/26	17/25	7.5/11
T510-4T11G/15PB	17/21	26/35	25/32	11/15
T510-4T15G/18.5PB	21/24	35/38.5	32/37	15/18.5
T510-4T18.5G/22P（B）	24/30	38.5/46.5	37/45	18.5/22
T510-4T22G/30P（B）	30/40	46.5/62	45/60	22/30
T510-4T30G/37P（B）	40/57	62/76	60/75	30/37
T510-4T37G/45P（B）	57/69	76/92	75/91	37/45
T510-4T45G/55P（B）	69/85	92/113	91/112	45/55
T510-4T55G/75P（B）	85/114	113/157	112/150	55/75
T510-4T75G/90P（B）	114/134	157/180	150/176	75/90
T510-4T90G/110P（B）	134/160	180/214	176/210	90/110
T510-4T110G/132P	160/192	214/256	210/253	110/132

2.4 Basic Technical Specifications

Table 2-2 Technical Specifications for Frequency Converters

Item		Specifications	
Basic functions	Maximum frequency	Vector control: 300.00Hz V/F control: 3200Hz	
	Carrier frequency	0.5kHz-16kHz, The carrier frequency can be adjusted automatically based on the load features.	
	Input frequency resolution	Digital setting: 0.01Hz Analog setting: maximum frequency × 0.025%	
	Control mode	Open-loop vector control (SVC) Closed-loop vector control (FVC) V/F Control	
	Start-up torque	G type: 0.5Hz/150% (SVC), 0Hz/180% (FVC) P type: 0.5Hz/100%.	
	Speed range	1：100 （SVC）	1：1000（FVC）
	Steady speed accuracy	±0.5%（SVC）	±0.02%（FVC）
	Torque control accuracy	±5%（FVC）	
	Overload capacity	G type: 150% rated current 60s; 180% rated current 3S P type: 120% rated current 60s; 150% rated current 3S	
	Automatic torque lifting	Manual torque lifting 0.1%-30.0%.	
	Three ways of V/F curve	Straight-line type; Multi-point type; N-power V/F curve (1.2 power, 1.4 power, 1.6power, 1.8power, 2power ,square)	
	Two ways of V/F separation	Two types: complete separation and half separation	
	Ramp mode	Straight-line ramp or S-curve ramp, Four groups of acceleration /deceleration time with the range of 0.0s-6500.0s	
	DC braking	0.00Hz - maximum output frequency, Braking time: 0.0s - 36.0s Braking action current value: 0.0% - 100.0%.	
	JOG control	JOG frequency range: 0.00Hz-50.00Hz, JOG acceleration / deceleration time: 0.0s-6500.0s	
	On board multiple preset speeds	It implements up to 16 speeds via the simple PLC function or combination of DI terminal states.	
	Built-in PID	It realizes process-controlled closed-loop control system easily.	
	Automatic voltage adjustment (AVR)	It can keep constant output voltage automatically when the main voltage changes.	
	Torque limitation and control	It cam limit the torque automatically and prevent frequent over current tripping during the running process.	
Individualized	Safety self-inspection of power-on	It can realize the safety detection of peripheral equipment such as grounding, short circuit and so on.	

functions	peripheral equipment	
	Over-voltage and over-loss speed control	Automatic limit of current and voltage during operation to prevent frequent over-current and over-voltage tripping
	Fast current Limit	Minimizing overcurrent fault and protecting frequency converter in normal operation
	Common DC bus function	It can realize common DC bus functions of multiple frequency converters.
	QUICK key	User-defined shortcut menu
	MF.K key	Programmable key: command channel switching/forward and reverse running/JOG running function selection
	Textile swing frequency control	Given length control function
	Timing control	Timing control function: setting time range 0h-65535h
Running channel	Running command sources	Three channels: operation panel, control terminal and serial communication port .They can be switched over between these sources in various ways.
	Frequency sources	There are total 10 of frequency sources, such as digital setting, analog voltage setting, analog current setting,pulse setting and serial communication port setting. They can be switched over these sources in various ways.
	Auxiliary frequency command	10 kinds of auxiliary frequency instructions. It can realize auxiliary frequency fine adjustment and frequency synthesis flexibly.
	Input terminal	Seven digital Input terminals, of which X5 can be used as high-speed pulse input. Compatible with active PNP Or NPN input mode, two analog input terminals, can be used as voltage or current input.
	Output terminal	A high-speed pulse output terminal DO (optional open collector type), 0 kHz-100 kHz square wave signal output, It can realize the output of set frequency, output frequency and other physical quantities. Three digital output terminals and two relay output terminals Two analog output terminals, 0/4mA-20mA or 0V-10V, can realize setting frequency and transmission. Output frequency and other physical quantities
Display and keyboard	LED display	Display monitoring parameters, output frequency, set frequency, bus voltage, etc.
	Keyboard lock and function selection	To realize partial or total lock of keys, define the scope of action of some keys, in order to prevent misoperation.
	Protection Function	Short circuit detection , input and output phase loss protection, overcurrent protection, overvoltage protection, undervoltage protection , overheat protection and overload protection
	Optional parts	Brake assembly
Ambient	Installation location	Indoor ,free from direct sunlight, dust-free, corrosive gases, combustible gases, oil smoke, vapour, drip or salt, etc.
	Altitude	<1000m
	Ambient temperature	-10°C～+40°C (ambient temperature is 40°C～50°C , please derate to use)

	Humidity	Less than 95 k% RH, no water droplet condensation
	Vibration	less than 5.9m/s 2 (0.6g)
	Storage temperature	-20℃～+60℃
	IP level	IP20
	Pollution grade	PD2
	Power distribution system	TN，TT

2.5 Peripheral Electrical Components and System Composition

When using T510series converter to control asynchronous motor to constitute control system, it is necessary to install various electrical components on the input and output sides of the converter to ensure the safety and stability of the system. In addition, the T510 series system structure is as follows:

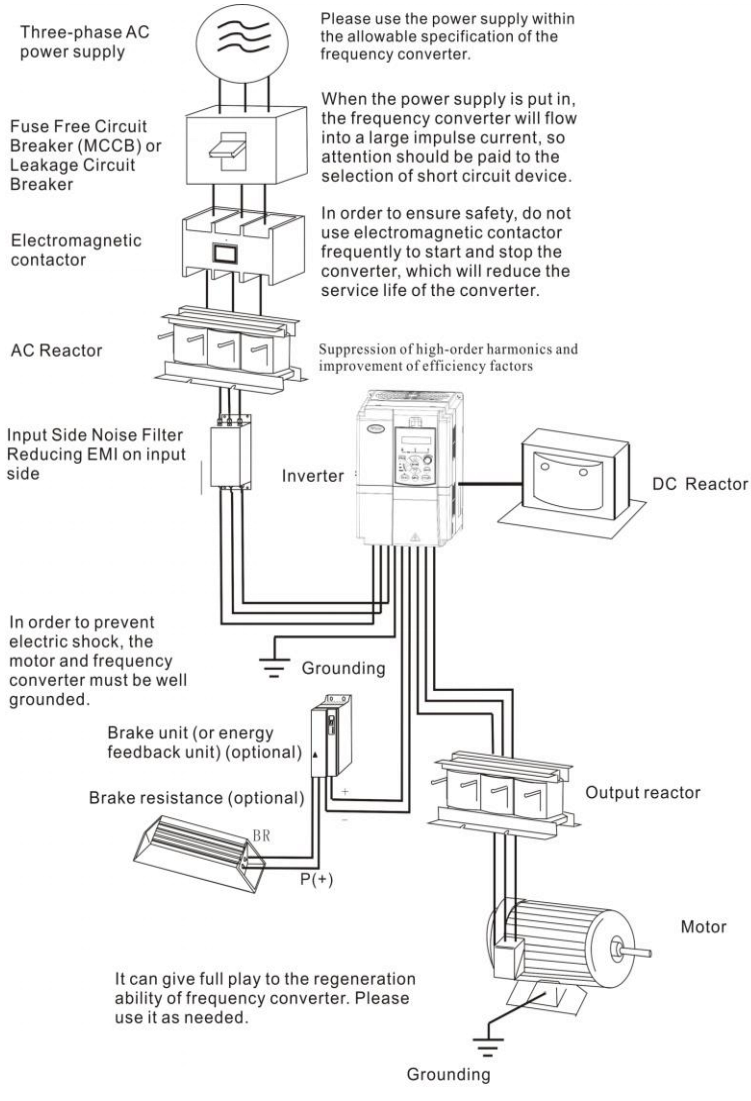
Three-phase AC power supply
Please use the power supply within the allowable specification of the frequency converter.
Fuse Free Circuit Breaker (MCCB) or Leakage Circuit Breaker
When the power supply is put in, the frequency converter will flow into a large impulse current, so attention should be paid to the selection of short circuit device.
Electromagnetic contactor
In order to ensure safety, do not use electromagnetic contactor frequently to start and stop the converter, which will reduce the service life of the converter.
AC Reactor
Suppression of high-order harmonics and improvement of efficiency factors
Input Side Noise Filter Reducing EMI on input side
Inverter
DC Reactor
In order to prevent electric shock, the motor and frequency converter must be well grounded.
Grounding
Brake unit (or energy feedback unit) (optional)
Brake resistance (optional)
BR
P(+)
Output reactor
Motor
It can give full play to the regeneration ability of frequency converter. Please use it as needed.
Grounding

2.5.1 Instructions for the Use of Peripheral Electrical Components

Table 2-3 T510 Instructions for the Use of Peripheral Electrical Components of Frequency Converters

Fittings Name	Installation Location	Functional Description
Air switch	Front end of input loop	Cut off power supply when downstream equipment is overcurrent
Contactor	Air switch and inverter between input sides	◆ Frequent power-up and power-down operation (less than twice per minute) or direct start-up operation should be avoided through contactor.
AC input reactor	Inverter input side	◆ Increase the input power factor; ◆ Effective elimination of high-order harmonics at input side to prevent damage to other equipment due to distortion of voltage waveform ◆ Elimination of input current imbalance caused by interphase unbalance of power supply
EMC input filter	Inverter input side	◆ Reduce the external transmission and radiation interference of the frequency converter. ◆ Reduce the conduction interference from the power source to the converter, and improve the anti-interference ability of the converter.
DC reactor	between p and P+	◆ Increase the input power factor; ◆ Improve the efficiency and thermal stability of the converter. ◆ It can effectively eliminate the influence of high-order harmonics on the input side of the converter and reduce the external conduction and radiation interference.
AC output reactor	Install close to the converter between the output side of the converter and the motor	◆ Frequency converter output side generally contains more higher harmonics. When the distance between the motor and the frequency converter is relatively long, there is a large distributed capacitance in the circuit. One of the harmonics may produce resonance in the circuit, which has two effects: a)Destroy the insulation performance of the motor, which will damage the motor for a long time. b) It produces large leakage current, which causes frequent protection of frequency converter. Generally, the distance between frequency converter and motor is over 100 m. It is recommended to install output AC reactor.

Notes:

• Do not install capacitors or surge suppressors on the output side of the converter, which will

lead to the failure of the converter or the damage of capacitors and surge suppressors.

- The input/output (main loop) of the converter contains harmonic components, which may interfere with the communication equipment attached to the converter. Therefore, anti-interference filter is installed to minimize interference.
- Detailed information and selection of peripheral equipment refer to the selection manual of peripheral equipment.

2.5.2 Selected Accessories

If you need the following accessories, please specify when ordering.

Table 2-4 T510 Inverter Selected Accessories

Name	Model	Functions	Note	Note 1
Built-in braking unit	Product model with "B"	The built-in brake units of single-phase 0.4kw~2.2kw and three-phase 0.75kw~18.5kw G type engines are standard configuration.	Selection of built-in braking units for 22kw~90kw G type	T510 series 22kw G type are also equipped with built-in braking units. T510 series 30kw-75kw G type can be equipped with built-in braking unit.
External braking unit	TDBU	110 kw and above external braking unit	Over 110 kw in parallel	
Energy feedback unit	TDFB	The power in the converter is fed back to the energy-saving products of the AC network.		
One drag two water supply card	T510WS6	One drag two constant pressure water supply card	T510 Series 18.5kw and above power section built-in	
External LED operation panel	KB301	External LED display and operation keyboard	T510 series universal 8PIN interface	

2.6 T510 Series Inverter Appearance and Location Name Descriptions

2.6.1 Product profile

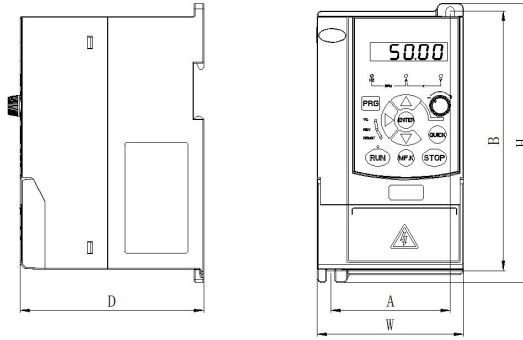

Figure A-1 3.0kw Shape Size and Installation Size

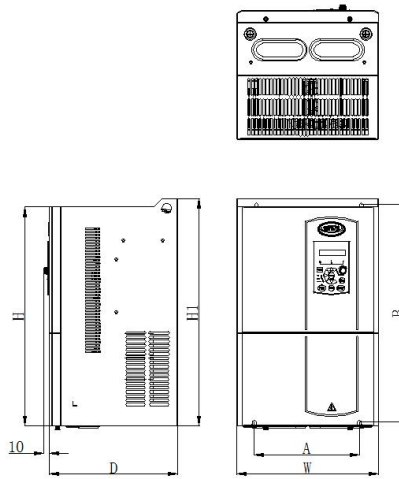

Figure A-2 18.5kw-110kw Shape Size and Installation Size

2.6.2 Shape and installation hole size:

Table A-1 T510 Shape and Installation Hole Dimensions

Code	Models	Installation Hole Position (mm)		Dimension （mm）				Diameter (mm）	Weight (kg)
		A	B	H	H1	W	D		
Z1	T510-2S0.4B	76	164	177	/	93	117	5.5	0.95
	T510-2S0.75B								
	T510-2S1.5B								
	T510-4T0.75G/1.5PB								
	T510-4T1.5G/2.2PB								
	T510-4T2.2G/3.0PB								
	T510-4T3.0GB								
Z2	T510-4T4.0PB	119	189	200	/	130	162	5.5	
	T510-4T4.0G/5.5PB								
	T510-4T5.5G/7.5PB								
Z3	T510-4T7.5G/11PB	128	238	250	/	140	170	6	
	T510-4T11G/15PB								
Z4	T510-4T15G/18.5PB	166	266	280	/	180	170	6	
Z5	T510-4T18.5G/22PB	150	339	340	355	230	210	7	
	T510-4T22G/30PB								
Z6	T510-4T30G/37P（B）	200	413	415	430	274	245	7	
	T510-4T37G/45P（B）								
Z7	T510-4T45G/55P（B）	245	523	525	542	300	300	10	
	T510-4T55G/75P（B）								
Z8	T510-4T75G/90P（B）	270	560	554	580	338	340	10	
	T510-4T90G/110P								
	T510-4T110G/132P								
Z9	T510-4T132G/160P								
	T510-4T160G/200P								
	T510-4T185G/200P								
Z10	T510-4T200G/220P								
	T510-4T220G/250P								
Z11	T510-4T250G/280P								
	T510-4T280G/315P								
Z12	T510-4T315G/355P								
	T510-4T355G/400P								
	T510-4T400G/450P								
	T510-4T450G/500P								

2.6.3 External keyboard dimensions

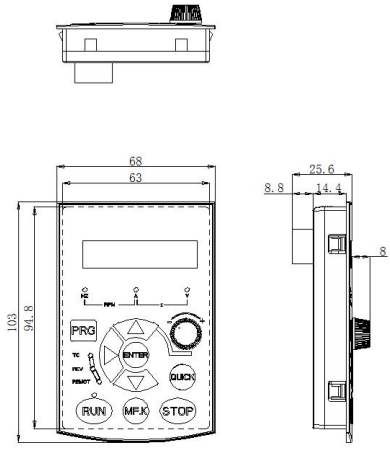

Figure 2-8 External Keyboard Dimensions

External Keyboard Installation Hole Size

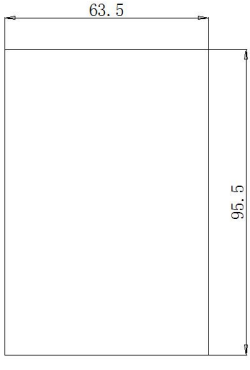

Fig. 2-9 External Keyboard Installation Hole Size

2.7 Frequency Converter Daily Maintenance and Service

2.7.1 Daily maintenance

Due to the influence of environment temperature, humidity, dust and vibration, the device inside the converter will be aged, which will lead to potential failure of the converter or reduce the service life of the converter. Therefore, it is necessary to carry out daily and regular maintenance and service of the frequency converter.

Daily inspection items:

1)Whether there is abnormal change of sound in motor operation

2) Whether vibration occurs in motor operation

3) Whether the installation environment of frequency converter has changed

4) Whether the heat dissipation fan of frequency converter works properly or not

5) Whether the converter overheated

Daily cleanings:

Frequency converter should always be kept in a clean state. Effectively remove the dust on the upper surface of the frequency converter to prevent the dust from entering the internal of the frequency converter. Especially metal dust.

Effective removal of oil contamination from heat dissipation fan of frequency converter.

2.7.2 Periodic Inspections

Please check the places which are difficult to check in operation regularly.

Regular Inspection Items:

1)Check the air duct and clean it regularly.

2)Check whether the screw is loose

3) Check the frequency converter is corroded

4) Check whether there are arc-drawing marks on terminals

5) Insulation test of main circuit

Reminder: When measuring insulation resistance with megawatt-hour meter (please use DC 500V megawatt-hour meter), disconnect the main circuit from the frequency converter.

Do not test the insulation of the control circuit with an insulating resistance meter. There is no need to carry out high-pressure testing (completed at the time of leaving the factory).

2.7.3 Frequency converter vulnerable parts replacement

Frequency converter vulnerable parts mainly include cooling fans and filter electrolytic capacitors, whose life-span is closely related to the use of the environment and maintenance conditions. The general life-span is:

Device name	Life-span
Fan	2-3 years
Electrolytic capacitor	4-5 years

Users can determine the replacement life-span according to the running time.

1) Cooling fan

Possible causes of damage: bearing wear, blade aging.

Criteria for judging: whether there are cracks in fan blades, etc., and whether there are abnormal vibration sounds when starting.

2) Filter electrolytic capacitor

Possible causes of damage: poor quality of input power supply, high ambient temperature, frequent load jump, electrolyte aging.

Discriminant criteria: whether there is leakage of liquid, whether the safety valve has protruded, the determination of electrostatic capacitance, the determination of insulation resistance.

2.7.4 Converter storage

After the user purchases the frequency converter, temporary storage and long-term storage must pay attention to the following points:

When storing, try to pack the original package into the packing box of our company.

Long-term storage will lead to deterioration of electrolytic capacitors. It is necessary to ensure that the primary power is turned on within 2 years for at least 5 hours, and the input voltage must be slowly raised to the rated value with a voltage regulator.

2.8 Frequency Converter Warranty Descriptions

Free warranty refers only to the converter itself.

1) In normal use, failure or damage occurs. Our company is responsible for 18-month warranty (from the date of the manufacturer, the barcode on the fuselage shall prevail). For more than 18 months, reasonable maintenance fees will be charged.

2) Within 18 months, if the following happens, a certain maintenance fee shall be charged:

a) Machine damage caused by the user's failure to comply with the provisions of the manual;

b) Damage caused by fire, flood, abnormal voltage, etc.

c) Damage caused by the use of frequency converters in abnormal functions;

Relevant service expenses shall be calculated according to the unified standard of the manufacturer, and if there is a contract, the principle of contract priority shall be applied.

2.9 Type Selection Guidance

Three control modes can be provided: V/F, SVC and FVC.

When choosing the frequency converter, we must first make clear the technical requirements of the system, the application situation of the frequency converter and the specific situation of the load characteristics, and consider synthetically the factors of adapting motor, output voltage and rated output current, then select the type that meets the requirements and determine the operation mode.

The basic principle is that the rated load current of the motor should not exceed the rated current of the frequency converter. Generally, according to the specifications of the allocated motor capacity to choose, pay attention to the comparison of motor and frequency converter rated current. The overload capability of the converter is significant for the start-up and braking process. Whenever there is short-term overload during operation, it will cause the change of load speed. If the requirement of speed accuracy is high, please consider enlarging one grade.

Fan and pump types: Load capacity requirements are low, because the load torque is proportional to the square of speed, so the low-speed operation load is lighter (except Roots fan) and because this kind of load has no special requirements for speed accuracy, so the square torque V/F is chosen.

Constant Torque Load: Most of the loads have constant Torque characteristics, but the requirements of speed accuracy and dynamic performance are generally not high. For example, extruder, mixer, conveyor belt, in-plant tramcar, crane translation mechanism, etc. Multi-segment V/F operation mode can be selected when selecting type.

The controlled object has certain dynamic and static index requirements: this kind of load generally requires rigid mechanical characteristics at low speed, in order to meet the dynamic and static index requirements of the production process for the control system. SVC control mode can be selected when selecting type.

The controlled object has higher requirements of dynamic and static indicators: VC control mode can be used in the case of high requirements of speed regulation accuracy and dynamic performance indicators and high precision synchronous control. For example, elevators, papermaking, plastic film processing production lines.

2.10 Braking Component Selection Guide

(*): Table 2-6 is the guidance data. Users can choose different resistance and power according to the actual situation. (But the resistance must not be less than the recommended value in the table, the power can be large.) The selection of braking resistance needs to be determined according to the power generated by the motor in the practical application system, which is related to the inertia of the system, the deceleration time and the energy of potential energy load, and needs the customers to choose according to the actual situation. The bigger the inertia of the system, the shorter the deceleration time and the more frequent the braking, the bigger the braking resistance needs to choose and the smaller the resistance value.

2.11 Selection of Resistance Value

When braking, almost all the regenerative energy of the motor is consumed on the braking resistance.

According to the formula: U*U/R=Pb

- Formula U-System Stabilized Braking Braking Voltage

(Different systems are also different,for 380VAC systems, 700V is generally used.)

- Pb. - - Braking power

2.12 Power Selection of Brake Resistance

In theory, the power of braking resistance is the same as that of braking power, but considering the reduction of 70%.

According to the formula:0.7*Pr=Pb*D

- Pr - Power of Resistor
- D - Braking frequency (the proportion of regeneration process to the whole working process)

Elevator - 20%-30%

Decoiling and Rewinding - 20-30%

Centrifuge - --- 50%-60%

Accidental Braking Load - 5%

Generally 10%

Table 2-6 T510 Type Selection Table of Frequency Converter Brake Components

Model	Braking Resistance Recommended power	Braking Resistance Recommended Value	Braking Unit	Note
T510-2S0.4B	80W	≥200Ω	Built-in optional	Standard built-in add "B" after the model of frequency converter
T510-2S0.75B	80W	≥150Ω		
T510-2S1.5B	100W	≥100Ω		
T510-2S2.2B	100W	≥70Ω		
T510-4T0.75G/1.5PB	150W	≥300Ω	Standard built-in	No special explanation
T510-4T1.5G/2.2PB	150W	≥220Ω		
T510-4T2.2G/3.0PB	250W	≥200Ω		
T510-4T3.0G/4.PB	250W	≥200Ω		
T510-4T4.0G/5.5PB	300W	≥130Ω		
T510-4T5.5G/7.5PB	400W	≥90Ω		
T510-4T7.5G/11PB	500W	≥65Ω		
T510-4T11G/15PB	800W	≥43Ω		

Model	Braking Resistance Recommended power	Braking Resistance Recommended Value	Braking Unit	Note
T510-4T15G/18.5PB	1000W	≥32Ω		
T510-4T18.5G/22PB	1300W	≥25Ω		
T510-4T22G/30P	1500W	≥22Ω	Built-in optional	Standard built-in add "B" after the model of frequency converter
T510-4T30G/37P	2500W	≥16Ω		
T510-4T37G/45P	3.7KW	≥16Ω		
T510-4T45G/55P	4.5KW	≥16Ω		
T510-4T55G/75P	5.5KW	≥8Ω		
T510-4T75G/90P	7.5KW	≥8Ω		
T510-4T90G/110P	4.5KW*2	≥8Ω*2		
T510-4T110G/132P	5.5KW*2	≥8Ω*2	External location	TDBU-70-B×2

Note: *2 means that two brake units are used in parallel with their respective brake resistors, *3 means the same as *2

Chapter III T510 Series Inverters Installation and Wiring

3.1 Mechanical Installation

3.1.1 Installation environment:

1) Ambient temperature: Ambient temperature has a great impact on the life-span of the converter, and the operating ambient temperature of the converter is not allowed to exceed the allowable temperature range （-10℃～50℃）.

2) Install the frequency converter on the surface of the flame-retardant object, and there should be enough space around it to dissipate heat. Frequency converter is easy to generate a lot of heat when working. The screw is mounted vertically on the mounting support.

3) Please install it in a place where vibration is not easy. Vibration should not exceed 0.6G. Special attention should be paid to keeping away from press and other equipment.

4) Avoid installing in direct sunlight, damp and watery places.

5) Avoid installing corrosive, flammable and explosive gases in the air

6) Avoid installing in places with greasy, dusty and polymetallic dust.

When T510 series converters radiate heat from bottom to top, when many converters work, they are usually installed side by side. When the installation of the upper and lower rows is needed, because the heat of the lower row frequency converter will cause the temperature rise of the upper row equipment to cause failure, measures such as installing the heat insulation guide plate should be taken. When the temperature is greater than 22kW, A should be greater than 50mm.

Power Level	Installation Dimensions	
	B	A
≤15kw	≥100mm	No requirement can be made.
18.5kw—30kw	≥200mm	≥50mm
≥37kw	≥300mm	≥50mm

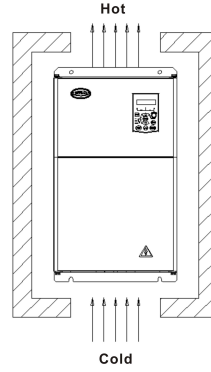

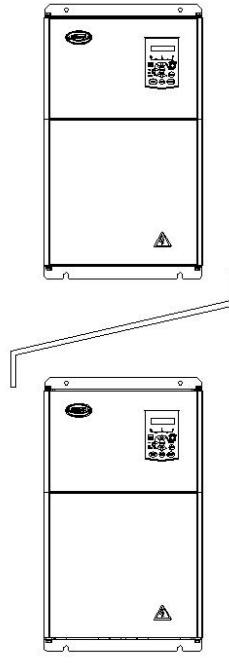

Figure 3-1 Heat Insulation Guide Plate Installation Diagram

3.1.2 The heat dissipation should be paid attention to in mechanical installation. So please pay attention to the following points:

1) Please install the frequency converter vertically so that the heat can be distributed upward. But it can't be inverted. If there is a multi-frequency cabinet, it is best to install side by side. For the occasion of installation, please refer to the schematic of Figure 3-1 to install the heat insulation guide plate.

2) The installation space is shown in Figure 3-1 to ensure the heat dissipation space of the converter. But when arranging, please consider the heat dissipation of other devices in the cabinet.

3) Installation bracket must be flame retardant material

4) For the application of metal dust, it is recommended to install outside the radiator cabinet. At this time, the fully sealed cabinet space should be as large as possible.

3.1.3 Removal and Installation of Lower Cover Plate

T series converters below 11 kw are made of plastic case. The removal of the lower cover of plastic case is shown in figs. 3-2 and 3-3. The hook of the lower cover plate can be ejected forcefully from the inside by means of a tool

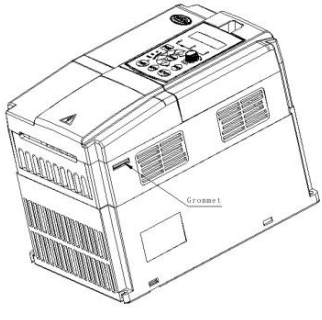

Figure 3-2 Undercover Removal Diagram of Plastic Shell

T series frequency converters above 15kw adopt sheet metal shell. The removal of the lower cover plate of sheet metal shell can be seen in Figure 3-4. The screw of the lower cover plate can be loosened directly with the tool.

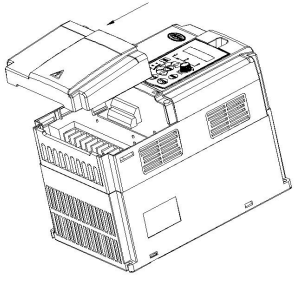

Figure 3-3 Undercover Removal Diagram of Plastic Shell

Danger
When the lower cover plate is disassembled, avoid the falling off of the lower cover plate, which may cause harm to the equipment and people.

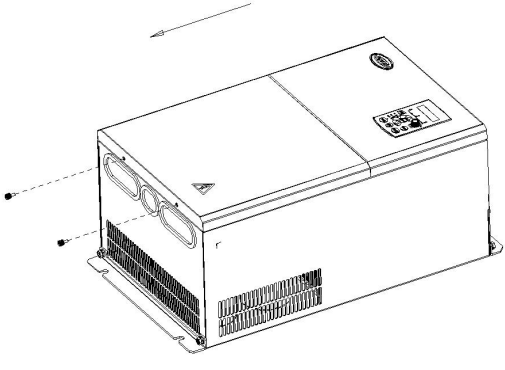

Figure 3-4 Sheet Metal Shell Undercover Removal

3.2 Electrical Installation

3.2.1 Guidance for selection of peripheral electrical components

Table 3.2.1 T510 Frequency Converter Selection of Peripheral Electrical Components Guidance

Model	MCCB (A)	Connector (A)	Input Side Main Circuit Conductor (mm²)	Output Side Main Circuit Conductor (mm²)	Control Loop Traverse (mm²)	Grounded Wire (mm²)
Single-phase power supply 200～240V 50/60Hz						
T510-2S0.4B	16	10	2.5	2.5	1.0	0.75
T510-2S0.75B	16	12	2.5	2.5	1.0	0.75
T510-2S1.5B	25	18	4.0	2.5	1.0	1.5
T510-2S2.2B	32	25	6.0	4.0	1.0	2.5
Three-phase power supply 380～480V 50/60Hz						
T510-4T0.75G/1.5PB	10	10	2.5	2.5	1.0	0.75
T510-4T1.5G/2..2PB	16	10	2.5	2.5	1.0	0.75
T510-4T2.2G/3.0PB	16	10	2.5	2.5	1.0	0.75
T510-4T3.0G/4.0PB	25	16	4.0	4.0	1.0	1.5
T510-4T4.0G/5.5PB	25	16	4.0	4.0	1.0	1.5
T510-4T5.5G/7.5PB	32	25	4.0	4.0	1.0	4
T510-4T7.5G/11PB	40	32	4.0	4.0	1.0	4
T510-4T11G/15PB	63	40	4.0	4.0	1.0	4
T510-4T15G/18.5PB	63	40	6.0	6.0	1.0	6
T510-4T18.5G/22P（B）	100	63	10	10	1.0	10
T510-4T22G/30P（B）	100	63	10	10	1.5	10
T510-4T730G/37P（B）	125	100	16	16	1.5	16
T510-4T37G/45P（B）	160	100	25	25	1.5	16
T510-4T45G/55P（B）	200	125	35	35	1.5	16
T510-4T55G/75P（B）	200	125	50	50	1.5	25
T510-4T75G/90P（B）	250	170	70	70	1.5	35
T510-4T90G/110P	250	205	95	95	1.5	50
T510-4T110G/132P	350	350	120	120	1.5	70

3.2.3 wiring modes

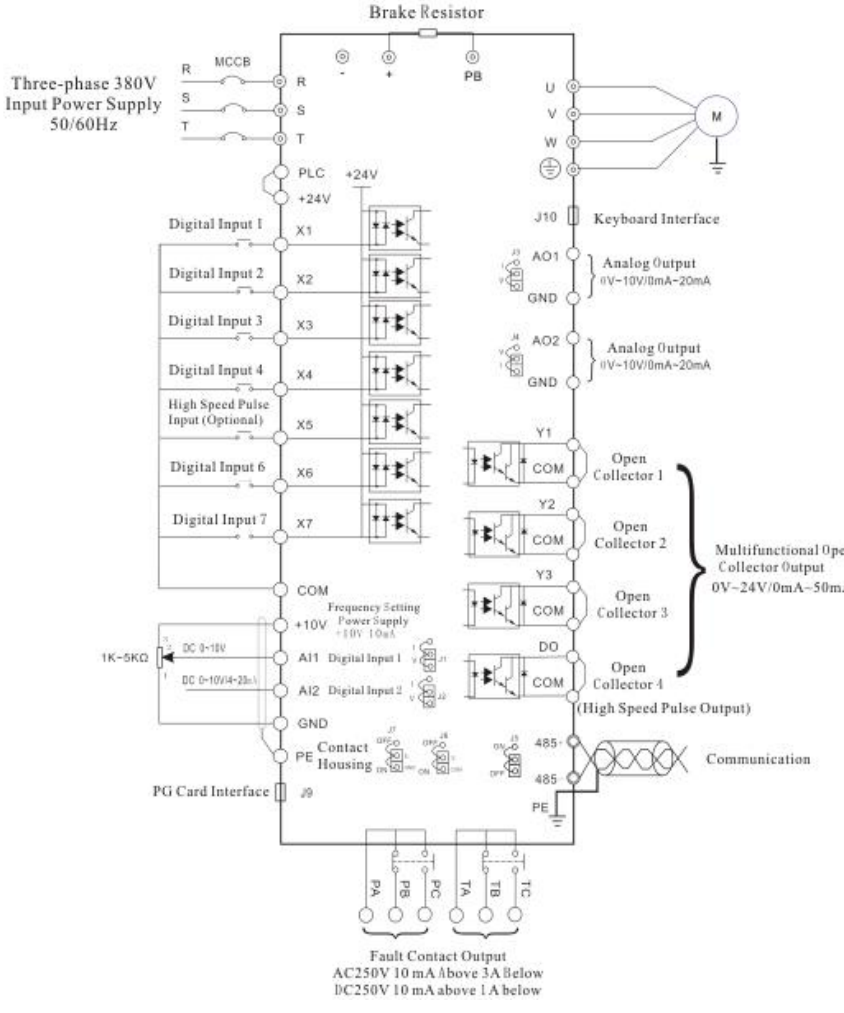

Figure 3-8 Frequency Converter Typical Wiring Diagram

3.2.4 Main Circuit Terminals and Connections

Danger

1.Make sure that the power switch is in OFF state before wiring operation, otherwise electric shock may occur!
2. Wiring personnel must be professional trainees, otherwise they may cause injury to equipment and people!
3. It must be grounded reliably, otherwise there will be electric shock or fire danger!

Warning

1.Make sure that the input power supply is the same as the rated value of the converter, otherwise the converter will be damaged!
2.Make sure that the motor and the frequency converter are compatible, otherwise it may damage the motor or cause the protection of the frequency converter!
3. It is impossible to connect the power supply to U, V and W terminals, otherwise the converter will be damaged!
4. Do not connect brake resistance directly to DC bus (+), (-) or cause fire alarm!

T510-2S0.4B ～ T510-2S2.2B	⏚ R S (+) PB U V W
T510-4T0.75G/1.5PB ～ T510-4T3.0GB	⏚ R S T (+) PB U V W
T510-4T4.0G/5.5PB ～ T510-4T15G/18.5PB	PB P N R S T U V W
T510-4T18.5G/22P ～ T510-4T37G/45P	⏚ R S T PB (+) (-) U V W POWER R POWER
T510-4T45G/55P ～ T510-4T90G/110P	⏚ R S T P (+) (-) U V W POWER OPTION MOTOR

1) Description of main circuit terminal of single-phase converter:

Terminal Label	Illustration
R、S	Single-phase 220V AC power supply connection point
（+）、（-）	Common DC bus input point
PB、(+)	Connect braking resistance
U、V、W	Connect three-phase motor
⏚	Safe grounded of frequency converter

2) Description of main circuit terminal of three-phase converter:

Terminal Label	Illustration
R、S、T	AC input three-phase power connection point
(+)、（-）	Common DC bus terminal, connection point of external braking unit above 18.5kw
PB、(+)	Connect braking resistance
P、(+)	External reactor connection point
U、V、W	Connect three-phase motor
⏚	Safe grounded of frequency converter

Cautions for wiring:

a）Input power supply L, N or R, S, T:

Frequency converter input side wiring, no phase sequence requirements.

b) DC bus (+), (-) terminals:

Attention should be paid to the residual voltage of DC bus terminals (+) and (-) after power outage. It is necessary to wait for the CF0RGE lamp to be extinguished and make sure that it is less than 36V before it can be contacted. Otherwise, there is a danger of electric shock. When using external brake components above 22kW, it should be noted that the polarity of (+) and (-) can not be reversed, otherwise the frequency converter will be damaged or even fire. The wiring length of the brake unit shall not exceed 10 m. Twisted pairs or compact double-wire parallel wiring should be used. The brake resistance can not be directly connected to the DC bus, which may cause damage to the converter or even fire.

c) Brake resistance connection terminals (+), PB:

The brake resistance connection terminal is valid only for the model with 18.5kW or less and confirmed to have built-in brake unit. Reference value of brake resistance selection and wiring distance should be less than 5 m. Otherwise, the frequency converter may be damaged.

d) External reactor connection terminals P, (+)

22kw ~ 200kw power converter, if it needs to select and distribute reactor, remove the connector between P and (+) terminals when assembling, and connect the reactor between two terminals.

e) Frequency converter output side U, V, W:

No capacitor or surge absorber can be connected on the side-out side of the converter, otherwise the converter will be often protected or even damaged. When the motor cable is too long, due to the influence of distributed capacitance, it is easy to produce electrical resonance, which may cause motor insulation damage or large leakage current to make the converter over-current protection. When the length of motor cable is longer than 100m, an AC output reactor shall be installed.

f) Grounding terminal ⏚ PE:

The terminal must be grounded reliably and the grounding wire resistance must be less than 0.1Ω. Otherwise, the equipment will work abnormally or even be damaged. Grounding terminal ⏚ and power supply zero-line N terminals should not be shared.

3.2.5 Control terminals and wiring:

1) The terminal layout of the control circuit is as follows:

485+	485-	10V	AI1	GND	X1	X2	X3	X4	X5	COM	DO	PA	PB	PC

GND	AI2	AO1	AO2	COM	X6	X7	24V	PLC	Y1	Y2	Y3	TA	TB	TC

Figure 3-9 Terminal Layout of Control Loop

2) Function description of control terminal:

Table 3-3 T510 Frequency Converter Control Terminal Function Description

Item	Terminal Symbol	Terminal Name	Functional Descriptions
Power supply	+10V-GND	External +10V power supply	External supply + 10V power supply, maximum output current: 10mA It is generally used as power supply for external potentiometer. The resistance range of potentiometer is 1 kΩ~5 KΩ.
	+24V-COM	External +24V power supply	External supply + 24V power supply, maximum output current: 200mA Usually used as working power supply for digital input and output terminals and power supply for external sensors
	PLC	External power input terminal	The factory defaults + 24V connection: When X1-X7 is driven by external signal, the PLC needs to be connected with external power supply and disconnected from + 24V power supply terminal.
Analog input	AI1-GND	Analog input terminal 1	1. Input range: DC 0V-10V/0mA-20mA, determined by J1 jumper selection on control board . 2. Input impedance: 22KΩ at voltage input and 250Ωat current input.
	AI2-GND	Analog input terminal 2	Input range: DC 0V-10V/0mA-20mA, determined by J2 jumper selection on control board . 2. Input impedance: 22KΩ at voltage input and 250Ωat current input.
Digital input	X1-COM	Digital input 1	1. Optical root isolation, compatible with bipolar input 2. Input impedance: 3.3kΩ 3. Voltage range at level input: 9V-30V
	X2-COM	Digital input 2	
	X3-COM	Digital input 3	
	X4-COM	Digital input 4	
	X5-COM	High speed pulse input terminal	In addition to the characteristics of X1-X4, it can also be used as a high-speed pulse input channel. Maximum input frequency: 100kHz
Analog output	AO1-GND	Analog output 1	Voltage or current output is determined by J3 jumper selection on the control board. Output voltage range: 0V-10V Output current range: 0 mA-20 mA
Digital output	DO-COM	High speed pulse output	It is constrained by the output mode of function code DO terminal. As a high-speed pulse output, the maximum frequency is 100 kHz. As open-circuit output of collector, it is the same as Y1 specification.
Communication serial port	485+	485 differential signal positive end	Standard RS-485 interface, please use twisted pair or shield wire, J5 is terminal resistance matching jumper, factory value without jumper cap is OFF state.
	485-	485 differential signal negative end	

Relay output	TA-TB	Normally closed terminals	Contact driving capability: AC 250V，3A，COSø=0.4。 DC 30V 1A。
	TA-TC	Normally open terminals	
Auxiliary interface	J10	Keyboard interface	Local keyboard
	J13	External keyboard interface	485 ports of external keyboard
Jumper	J6、J7	COM and GND connect PE jumper	J6 is COM and PE jumper, J7 is GND and PE jumper, factory value jumps to the bottom of ON state.

3) Control terminal wiring instructions:

a) Analog input terminal:

Because the weak analog voltage signal is particularly susceptible to external interference, shielded cables are generally needed, and the wiring distance should be as short as possible, not exceeding 20m, as shown in Figure 3-10. In some cases where the analog signal is seriously disturbed, filter capacitors or ferrite cores are needed on the analog signal source side, as shown in Figure 3-11.

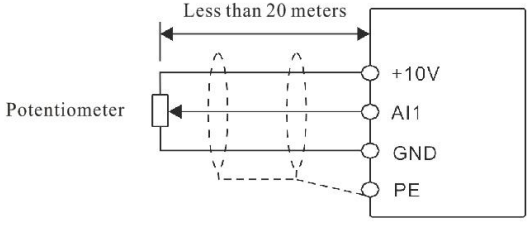

Figure 3-10 Analog Input Terminal Wiring Diagram

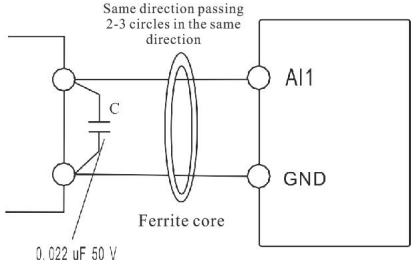

Figure 3-11 Analog Input Terminal Processing Wiring Diagram

B) Digital input terminal:

Generally, shielded cables are needed, and the wiring distance should be as short as possible, not more than 20m. When the active driving mode is selected, the necessary filtering measures should be taken for the crosstalk of power supply. The contact control mode is recommended.

c) X terminal wiring method

Dry contact common cathode connection mode

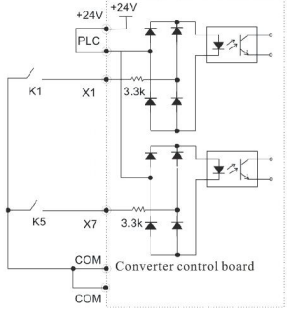

Figure 3-12 Dry contact Co-cathode Wiring Diagram

This is the most common way of connection. If external power supply is used, the short circuit between + 24V and PLC must be removed, the positive pole of external power supply is connected to PLC, and the negative pole of external power supply is connected to COM.

- Common anode connection of dry contact

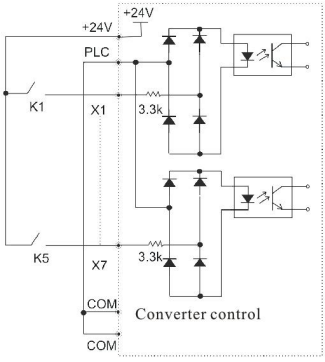

Figure 3-13 Dry Contacts Common Anode Wiring Diagram

This connection mode must remove the short circuit between + 24V and PLC, and then connect the PLC and COM.

●Source wiring mode

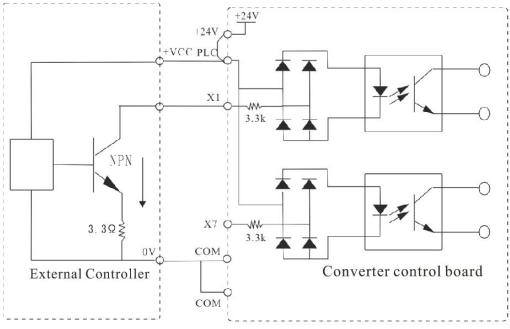

Figure 3-14 Source Wiring Mode

This is the most common way of connection. If external power supply is used, the short circuit between + 24V and PLC must be removed, the positive pole of external power supply is connected to PLC, and the negative pole of external power supply is connected to COM.

●Leakage wiring mode

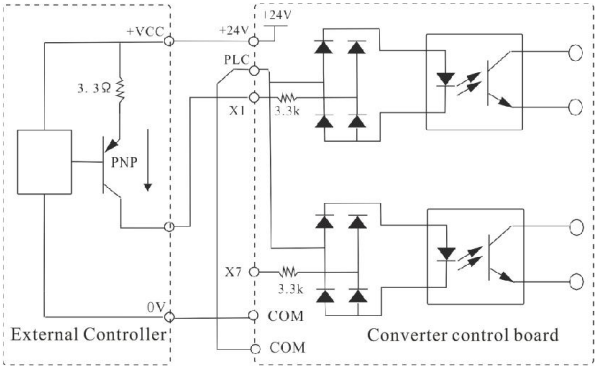

Figure 3-15 Leakage Wiring Mode

This connection mode must remove the short circuit between + 24V and PLC, connect + 24V with the common end of the external controller, and connect PLC with COM at the same time.

d) Digital output terminal:

When the digital output terminal needs to drive the relay, absorption diodes should be installed on both sides of the relay coil. Otherwise, it is easy to cause damage to 24V DC power supply.

Warning: The polarity of absorption diode must be installed correctly. Figure 3-16. Otherwise, when the digital output terminal has output, the direct current 24V power supply will be burnt out immediately.

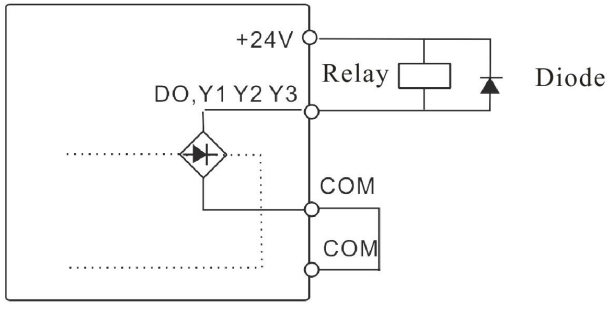

Figure 3-16 Digital Output Terminal Wiring Diagram

Chapter IV Operation and Display

4.1 Introduction of Operation and Display Interface

With the operation panel, the function parameters of the converter can be modified, the working state of the converter can be monitored and the operation control of the converter (start and stop) can be carried out. The shape and function area of the converter are shown in the following figure:

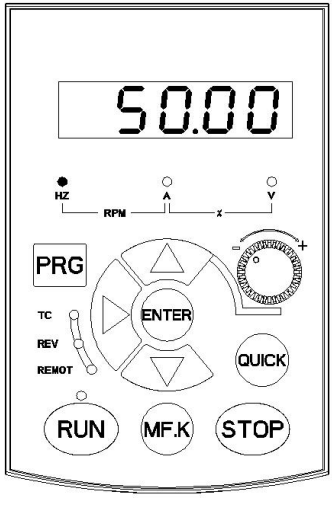

Figure 4-1 Operating Keyboard Layout

1）Functional indicator description:

RUN: When the LED is off, it means that the frequency converter is down, and when the LED is on, it means that the frequency converter is running.

LOCAL/REMOT: Keyboard operation, terminal operation and remote operation (communication control) indicator LED. The LED off indicates the keyboard operation control state, the LED on indicates the terminal operation control state, and the light flickering indicates the remote operation control state.

FWD/REV: Reverse and forward indicator light, light indicates that it is in reverse state.

TUNE/TC: Self-learning indicator for motor parameters, light indicates self-learning status.

2) Unit indicator:

Hz: Frequency unit A: Current unit V: Voltage unit

RPM (Hz + A): Speed unit (A + V): Percentage

3) Digital display area:

5-bit LED display, can display the set frequency, output frequency, various monitoring data and alarm code.

4) Keyboard button instruction sheet

Table 4-1 Keyboard Function Table

Key button	Name	Functional description
PRG	Programming/exit	Enter or exit shortcut parameter deletion
▶	Shift/monitor key	Under the downtime display interface and the running display interface, the display parameters can be selected circularly, and the modification bit of the parameters can be selected when modifying the parameters.
ENTER	Function/data key	Enter menu screen step by step and confirm setting parameters
MF.K	Multifunctional selection key	Detailed operation method is described in F0.40 (MF.K key function selection)
RUN	Forward run key	Press this key to turn the frequency converter forward
STOP RESET	Stop/reset key	Pressing this key can be used to stop operation when running, and reset operation when fault alarm occurs. The characteristics of this key are restricted by function code F0.05 (STOP/RES key function).
▲	Incremental key	Increment of data or function codes (increasing incremental speed when pressed continuously)

▼	Descending key	Decreasing of data or function codes (increasing deceleration when pressed continuously)
QUICK	Menu mode Selection key	Switch different menu modes (default is a menu mode) According to the median value of F0.35 (personality parameter group display selection)

4.2 Function Code Viewing and Modifying Method Description

The operation panel of T510 frequency converter adopts three-level menu structure for parameter setting and other operations.

The three-level menus are: function parameter group (first-level menu) →function code (second-level menu) →function code setting value (third-level menu).

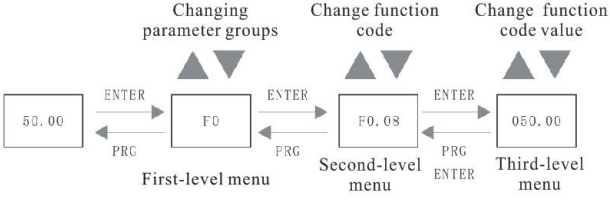

Figure 4-2 The Operation Flow Shown

Description: In the operation of three-level menu, you can press PRG or ENTER to return to the second-level menu. The difference between them: Press the ENTER key to save the settings parameters, return to the two level menu, and automatically transfer to the next function code; and press the PRG key directly return to the second-level menu, do not store the parameters, and return to the current function code.

For example: An example of changing the function code F3.02 from 10.00Hz to 15.00Hz. (Bold characters denote flickering bits)

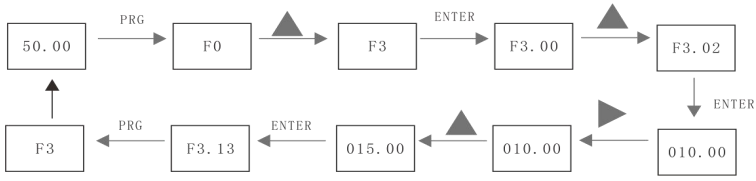

Figure 4-3 An Example of Parameter Editing Operation

In the third menu state, if the parameter has no flicker bits, it means that the function code can not be modified. The possible reasons are as follows:

1) The function code is an unmodifiable parameter. For example, the actual detection parameters, operation record parameters, etc.

2) The function code can not be modified in the running state, and can be modified only after the downtime.

4.3 State Parameters Viewing Method

In the state of shutdown or operation, a variety of state parameters can be displayed. Function codes F7.02-F7.09 (operation parameters) and F7.12-F7.15 (shutdown parameters) can be used to select whether the parameters are displayed in decimal bits. For definitions, see the description of F7 group of related function codes in chapter VI.

When the converter is powered on after power off, the displayed parameters are defaulted to those selected before power off of the converter.

4.4 Password Setting

Converter provides user password protection function. When F0.36 is set to non-zero, it will be user password, exit function code editing status password protection will take effect. Press PRG key again, it will show "---", user password must be input correctly in order to enter the normal menu, otherwise it will not be able to enter.

If you want to cancel the password protection function, you can only enter through the password and set F0.36 to 0.

4.5 Self-learning of Motor Parameters

To select the operation mode of vector control, the nameplate parameters of the motor must be input accurately before the frequency converter runs, and the T600 frequency converter matches the standard motor parameters according to the nameplate parameters. The vector control mode is highly dependent on the motor parameters, and in order to obtain good control performance, the accurate parameters of the controlled motor must be obtained. The self-learning steps of motor parameters are as follows:

First, the command source (F0.01) is selected as the command channel of the operation panel. Then please input the following parameters according to the actual parameters of the motor:

F1.02: Motor rated power F1.03: Motor rated voltage

F1.04: Motor rated current F1.05: Motor rated frequency

F1.06: Rated Speed of Motor

If the motor can be completely disconnected from the load, then F1.38 please choose 2 (complete self-learning), and then the RUN key on the keyboard panel, the frequency converter will automatically calculate

the following parameters of the motor:

F1.07: Stator Resistance

F1.08: Rotor Resistance

F1.09: Leakage inductance resistance

F1.10: Mutual inductance resistance

F1.11: No-load excitation current completes self-learning of motor parameters.

No-load current : $I_o = I \cdot \sqrt{1-\eta^2}$

Mutual inductance calculation : $L_m = \frac{U}{2\sqrt{3}\, f \cdot I_o} - L\alpha$

Among them, Lo is no-load current and Lm is mutual inductance and leakage inductance.

If the motor can not be completely separated from the load, then F1.38 please select 1 (static self-learning), and then press the RUN key on the panel. Inverter measures three parameters of stator resistance, rotor resistance and leakage inductance in turn. Without measuring mutual inductance and no-load current of motor, users can calculate these two parameters by themselves according to motor nameplate. The nameplate parameters used in calculation are rated voltage U, rated current I, rated frequency f and power factor η.

The calculation methods of no-load current and mutual inductance of motor are described in the following formulas, in which Lo is leakage inductance of motor.

Chapter V Functional parameters table

F0.36 is set to non-zero value, that is, parameter protection password is set. In functional parameter mode and user change parameter mode, the parameter menu must enter the password correctly before entering. To cancel the password, F0.36 should be set to "0".

The parameter menu in user customized parameter mode is not protected by password.

Group F and group A are basic function parameters, while group L is monitoring function parameters. The symbols in the function table are as follows:

“★”: Indicates that the setting value of this parameter cannot be changed when the frequency converter is in operation.

“●”: The value of this parameter is the actual detection record value, which can not be changed;

"*": Indicates that the parameter is "manufacturer parameter", which is limited to manufacturer settings and prohibits users from operating.

5.1 Summary of Basic Functional Parameters

Table 5-1 Summary of basic functional parameters

Code	Name	Setting Range	Default	Alteration
F0 Basic Function Unit				
F0.00	G/P type setting	1:G type (constant torque load) 2:P type (fan, pump type load)	1	★
F0.01	Command source selection	0: Operation panel command channel (REMOT LED off) 1: Terminal command channel (REMOT LED on) 2: Communication command channel (REMOT blinking)	0	☆

F0.02	Main frequency instruction selection	0: Digital setting (preset frequency F0.09, UP/DOWN can be modified, power failure can not be remembered 1: Digital setting (preset frequency F0.09, UP/DOWN can be modified, power-down memory) 2：AI1 3：AI2 4: Panel Potentiometer 5:PULSE pulse setting (X5) 6: Multi-segment instructions 7: Simple PLC 8：PID 9: Communication given Note: When the function of F4.01-F4.07 is set to 56,57,58, the multi-band frequency has the highest priority when the terminal is valid. See F8.01-F8.07 for the multi-band frequency setting.	4	★
F0.03	Auxiliary frequency instruction selection	Same as F0.03 (main frequency instruction selection)	0	★
F0.04	Frequency instruction overlay mode selection	Unit’s digit: Frequency instruction selection 0: Main frequency instruction 1: Result of main and auxiliary operations (operation relationship is determined by ten’s digit) 2: Switching between main frequency instruction and auxiliary frequency instruction 3: Switching between main frequency instruction and main and auxiliary operation results 4: Switching between auxiliary frequency instruction and primary and auxiliary operations Ten’s digit: Principal and auxiliary operational relations of frequency instructions 0: Master + auxiliary 1: Main-auxiliary 2: Maximum of both 3: Minimum of both	00	☆

F0.05	Selection of auxiliary frequency instruction range in overlay	0: Relative to maximum frequency 1: Relative to the main frequency instruction	0	☆
F0.06	Range of Auxiliary Frequency Instruction in overlay	0%～150%	100%	☆
F0.07	Reserved			
F0.08	Offset frequency of auxiliary frequency source in superposition	0.00Hz～ maximum frequency (F0.13)	0.00Hz	☆
F0.09	Preset Frequency	0.00Hz～ maximum frequency (F0.13)	50.00Hz	☆
F0.10	Digital setting frequency downtime memory selection	0: No Memory 1: Memory	1	☆
F0.11	Frequency instruction resolution	1: 0.1Hz (maximum frequency can be adjusted to 320Hz) 2: 0.01 Hz (maximum frequency can be adjusted to 3200 Hz)	2	★
F0.12	Runtime frequency instruction UP/DOWN benchmark	0: Operating frequency 1: Setting frequency	0	★
F0.13	Maximum frequency	50.00Hz～320Hz	50.00Hz	★
F0.14	Upper limit frequency	Lower limit frequency F0.17~maximum frequency F0.13	50.00Hz	☆
F0.15	Upper limit frequency instruction	0: F0.14 setting 1：AI1 2：AI2 3: Panel potentiometer 4: PULSE setting 5: Communication given	0	★

F0.16	Upper limit frequency bias	0.00Hz～maximum frequency F0.13	0.00Hz	☆
F0.17	The lower frequency	0.00Hz~upper limit frequency F0.14	0.00Hz	☆
F0.18	Setting frequency below lower limit frequency operation mode	0: Operating at the Lower Frequency Limit 1:Stopping 2: Zero-speed Operation (V/F mode, no output below 0.20Hz)	0	☆
F0.19	Carrier frequency	0.5kHz～16.0kHz	Type dependant	☆
F0.20	Carrier frequency adjustment with temperature	0:No 1:Yes	1	☆
F0.21	Acceleration time 1	0.00s～650.00s(F0.23=2) 0.0s～6500.0s(F0.23=1) 0s～65000s(F0.23=0)	Type dependant	☆
F0.22	Deceleration time 1	0.00s～650.00s(F0.23=2) 0.0s～6500.0s(F0.23=1) 0s～65000s(F0.23=0)	Type dependant	☆
F0.23	Acceleration and deceleration time unit	0:1 seconds 1:0.1 seconds 2:0.01 seconds	1	★
F0.24	Acceleration and deceleration time reference frequency	0: Maximum frequency (F0.13) 1: Set frequency 2:100Hz	0	★
F0.25	Acceleration and deceleration mode	0:Linear acceleration and deceleration 1:S-curve acceleration and deceleration A 2:S-curve acceleration and deceleration B	0	★
F0.26	Proportion of S-curve starting time	0.0%～（100.0%-F0.27）	30.0%	★
F0.27	S-curve end time Ratio	0.0%～（100.0%-F0.26）	30.0%	★
F0.28	JOG run frequency	0.00Hz~maximum Frequency	6.00Hz	☆
F0.29	JOG acceleration time	0.0s～6500.0s	20.0s	☆
F0.30	JOG run deceleration time	0.0s～6500.0s	20.0s	☆
F0.31	Terminal JOG priority	0: Invalid 1: Valid	1	☆
F0.32	Running direction	0: Consistent with the set direction 1:Contrary to the set direction	0	☆
F0.33	Anti-inversion control	0: Permit motor inversion 1: No motor inversion	0	☆

F0.34	Selection of functional parameter group display	Unit's digit:Group L display selection 0: No display 1: Display Ten's digit: Group A display selection 0: No display 1: Display	01	☆
F0.35	Display selection of personality parameter group	Unit's digit: User customized parametric group display selection 0: No display 1: Display Ten's digit: User change parametric group display selection 0: No display 1: Display	00	☆
F0.36	User password	0～65535	0	☆
F0.37	Function code modification properties	0: Modifiable 1: Not modifiable (except F0.36 and F0.37 can modify other parameters can not be modified)	0	☆
F0.38	Selection of terminal protection for power-on starter	0: No protection. When power on, the converter runs directly when the terminal is closed. 1: Protection. When the power is on, the operation terminal is closed, the frequency converter does not run, and the operation terminal needs to be disconnected and closed before it can run.	0	☆
F0.39	Undervoltage point setting	75.0%～140.0%	100.0%	☆
F0.40	Functional selection of MF.K key	0:MF.K is invalid 1: Operating panel command channel and remote command channel (subcommand channel or communication command channel) switching 2: Forward and reverse switching 3: Forward JOG 4: Reverse JOG 5: Reverse running	3	★
F0.41	F0.41 STOP/RESET key function	0: STOP/RES key downtime is effective only in keyboard mode 1: The STOP/RES key downtime function is	1	☆

		effective in any mode of operation.		
F0.42	Selection of motor parameter set	0: First motor parameter 1: Second motor parameters (group A0)	0	★
F0.49	Application macro Instructions	0: Invalid 2000: Constant pressure water supply (no sleep) 2010: Constant pressure water supply (with sleep, if the frequency converter is in sleep, the LED digital tube will display SLP) 2668: Special for engraving machine	0	★
F0.50	Parameter initialization	0: No operation 01: Restore factory parameters, excluding motor parameters, 02: Clear record information 03: Restore all factory parameters,including motor parameters 06: Backup user's current parameters 888: Restore user backup parameters	0	★
F1 First Motor Parameters				
F1.00	No.1 motor control mode	0: Sensorless vector control (SVC) 1: Closed-loop vector control (FVC) 2:V/F control	2	★
F1.01	Type selection of motor	0: Common asynchronous motor 1: Frequency conversion asynchronous motor	0	★
F1.02	Rated power of motor	0.1kw～1000.0kw	Type dependant	★
F1.03	Rated voltage of motor	1V～2000V	Type dependant	★
F1.04	Rated current of motor	0.01A~655.35A (Power ≤55kW) 0.1A-6553.5A (Power > 55kW)	Type dependant	★
F1.05	Rated frequency of motor	0.01Hz~maximum frequency	Type dependant	★
F1.06	Rated speed of motor	1rpm～65535rpm	Type dependant	★
F1.07	Stator resistance of asynchronous motor	0.001 to 65.535 (power ≤ 55kW) 0.0001 to 6.555 (power > 55kW)	Self-learning parameter	★

			s	
F1.08	Rotor resistance of asynchronous motor	0.001 to 65.535 (power ≤55kW) 0.0001 to 6.555 (power > 55kW)	Self-learnin parameter	★
F1.09	Leakage inductance of asynchronous motor	0.01mH~655.35m (power ≤55kW) 0.001mH~65.535mH (power > 55kW)	Self-learning Parameters	★
F1.10	Mutual inductance reactance of asynchronous motor	0.1mH~6553.5mH (power ≤ 55kW) 0.01mH~655.35mH (power > 55 kW)	Self-learning parameter	★
F1.11	No-load current of asynchronous motor	0.01A~F1.04 (power ≤ 55kW) 0.1A~F1.04 (power > 55kW)	Self-learning parameter	★
F1.28	Line number of encoder	1～65535	2500	★
F1.29	Type of encoder	0:ABZ incremental encoder 1:UVW incremental encoder 2: Revolver 3: Sine-cosine encoder	0	★
F1.31	ABZ incremental encoder AB phase sequence	0: Forward 1: Reverse	0	★
F1.38	Self-learning selection of motor parameters	0: No operation 1: Asynchronous static self-learning 2: Complete self-learning of asynchronous machine	0	★
Group F2 First Motor Vector Control Parameters				
F2.00	Speed loop proportional gain 1	1～100	30	☆
F2.01	Speed loop integral time 1	0.01s～10.00s	0.50s	☆
F2.02	Switching frequency 1	0.00～F2.05	5.00Hz	☆
F2.03	Speed loop proportional gain 2	1～100	20	☆
F2.04	Speed loop integral	0.01s～10.00s	1.00s	☆

	time 2			
F2.05	Switching frequency 2	F2.02~maximum frequency	10.00Hz	☆
F2.06	Vector control slip gain	50%～200%	100%	☆
F2.07	Speed loop filtering time constant	0.000s～0.100s	0.000s	☆
F2.08	Vector control overexcitation gain	0～200	64	☆
F2.09	Speed control torque upper limit source	0: Function code F2.10 setting 1:AI1 1:AI1 2:AI2 2:AI2 3: Panel potentiometer 4:PULSE pulse setting 5: Communication given 6: MIN (AI1, AI2) 7:MAX (AI1, AI2) Full range of 1-7 options corresponds to F2.10	0	☆
F2.10	Digital setting of torque upper limit in speed control mode	0.0%～200.0%	150.0%	☆
F2.13	Excitation regulation proportional gain	0～60000	2000	☆
F2.14	Excitation regulation integral gain	0～60000	1300	☆
F2.15	Torque regulation proportional gain	0～60000	2000	☆
F2.16	Torque regulation integral gain	0～60000	1300	☆
F2.17	Integral property of speed loop	Unit’s digit: Integral separation 0: Invalid 1: Valid	0	☆
F2.23	Selection of speed/torque control mode	0:Speed control 1: Torque control	0	★

F2.24	Selection of torque setting source under torque control mode	0: Number set 1 (F2.26) 1:AI1 2:AI2 3: Panel potentiometer 4:PULSE pulse 5: Communication given 6: MIN (AI1, AI2) 7:MAX (AI1, AI2) (full Range of 1-7 options corresponding to F2.26 digital setting)	0	★
F2.26	Torque digital setting in torque control mode	-200.0%～200.0%	150.0%	☆
F2.28	Torque control forward maximum frequency	0.00Hz~maximum frequency	50.00Hz	☆
F2.29	Torque control reverse maximum frequency	0.00Hz~maximum frequency	50.00Hz	☆
F2.30	Torque control acceleration time	0.00s～650.00s	0.00s	☆
F2.31	Torque control deceleration time	0.00s～650.00s	0.00s	☆
F3 V/F Control Parameter Group				
F3.00	V/F curve setting	0: Linear V/F 1: Multi point V/F 2: Square V/F 3:1.2 power V/F 4:1.4 power V/F 6:1.6 power V/F 8:1.8 power V/F 9: Reserved 10:V/F complete separation model 1:V/F semi-separation model	0	★
F3.01	Torque lifting	0.0%: (automatic torque lifting) 0.1%～30.0%	Type dependant	☆
F3.02	Torque lifting cut-off frequency	0.00Hz~maximum frequency	50.00Hz	★
F3.03	Multi point V/F frequency point 3	F3.05~rated frequency of motor (F1.05)	40.00Hz	★
F3.04	Multi point V/F voltage point 3	0.0%～100.0%	80.0%	★

F3.05	Multi point V/F frequency point 2	F3.07～F3.03	25.00Hz	★
F3.06	Multi point V/F voltage point 2	0.0%～100.0%	50.0%	★
F3.07	Multi point V/F frequency point 1	0.00Hz～F3.05	10.00Hz	★
F3.08	Multi point V/F voltage point 1	0.0%～100.0%	20.0%	★
F3.09	V/F slip compensation gain	0.0%～200.0%	0.0%	☆
F3.10	V/F overexcitation gain	0～600	0	☆
F3.11	V/F oscillation suppression gain	0～100	Type dependant	☆
F3.12	Flux braking	0: Invalid 1: Valid Note: If overpressure or overcurrent occurs, please increase Fb.06.	0	★
F3.13	V/F separated voltage source	0: Digital setting (F3.14) 1:AI1 2:AI2 3: Panel potentiometer 4:PULSE pulse setting (X5) 5: Multi-segment instructions 6: Simple PLC 7:PID 8: Communication given 9: Multi-segment V/F given (F3.03~F3.08) Note: 100.0% corresponds to motor rated voltage	0	☆
F3.14	Voltage digital setting for V/F separation	0V~rated voltage of motor	0V	☆
F3.15	Voltage acceleration time of V/F separation	0.0s-1000.0s represents the time from 0V to the rated voltage of the motor.	0.0s	☆
F3.16	Voltage deceleration time of V/F separation	0.0s-1000.0s represents the time when the rated voltage of the motor reaches 0V.	0.0s	☆
F3.17	Selection of V/F separation and shutdown mode	0: Frequency/voltage independent reduction to 0 1: Frequency decreases after voltage decreases to 0	0	☆
F4 Function Group of Digital Input and Output Terminals				

F4.00	Terminal command mode	0: Two-line 1 1: Two-line 2 2: Three-line 1 3: Three-line 2 4: Electronic cam two-wire type 3	0	★
F4.01	Functional selection of X1 terminal	0: No function 1: Forward operation (FWD) 2: Reverse operation (REV) 3: Three-line operation control 4: FJOG 5: Reverse JOG (RJOG) 6: Terminal UP 7: Terminal DOWN 8: Coast to stop 9: Failure reset (RESET) 10: Operation pause 11: External fault normal open input 12: Multistage instruction terminal 1 13: Multistage instruction terminal 2 14: Multistage instruction terminal 3 15: Multistage instruction terminal 4 16: Acceleration / deceleration time selection terminal 1 17: Acceleration / deceleration time selection terminal 2 18: Frequency instruction switching 19:UP/DOWN setting zero (terminal, keyboard) 20: Run command switching terminal 1 21: Acceleration / deceleration ban 22:PID pause 23:PLC state reset 24: Swing pause 25: Counter input 26: Counter reset 27: Length count input	1	★
F4.02	Functional Selection of X2 terminal		2	★
F4.03	Functional selection of X3 terminal		0	★
F4.04	Functional selection of X4 terminal		0	★
F4.05	Functional selection of X5 terminal		0	★

F4.06	Functional selection of X6 terminals	28: Length reduction 29: Torque control ban 30:PULSE (pulse) frequency input (only for X5) 31: Reserved 32: Direct current brake immediately 33: Normal closed input for external fault 34: Frequency modification enable 35:The direction of action of PID is reversed 36: External stop terminal 1 37: Run command switching terminal 2 38:PID integral suspension 39: Primary frequency instruction and preset frequency switching 40: Auxiliary frequency instruction and preset frequency switching 41: Forward JOG 1, JOG Priority 42: Reverse JOG 1, JOG Priority 43:PID parameter switching 44: User-defined fault 1 45: User-defined fault 2 46: Speed/torque control switching 47: Emergency stop 48: External stop terminal 2 49: Decelerated DC brake 50:The running time is cleared. 51: Two-line/three-line Switching 52: Reserved 53: Multistage closed-loop terminal 1 (corresponding to FA.00-FA.07) 54: Multistage closed-loop terminal 2 (corresponding to FA.00-FA.07) 55: Multistage closed-loop terminal 3 (corresponding to FA.00-FA.07) 56: Multistage frequency terminal 1 (corresponding to F8.01-F8.07) 57: Multistage frequency terminal 2 (corresponding to F8.01-F8.07) 58: Multistage frequency terminal 3 (corresponding to F8.01-F8.07)	0	★
F4.07	Functional selection of X7 terminal		0	★
F4.08	Functional selection of X8 terminal		0	★

		60: Motor selection terminal		
F4.09	Functional selection of X9 terminals	Ditto	0	★
F4.10	Functional selection of X10 terminals		0	★
F4.11	X filtering time	0.000s～1.000s	0.010s	☆
F4.12	Change rate of terminal UP/DOWN	0.001Hz/s～65.535Hz/s	1.00Hz/s	☆
F4.13	X1 delay time	0.0s～3600.0s	0.0s	★
F4.14	X2 delay time	0.0s～3600.0s	0.0s	★
F4.15	X3 delay time	0.0s～3600.0s	0.0s	★
F4.16	Effective mode selection of X terminal 1	0:High level effective 1: Low level effective Unit's digit: X1 Ten's digit: X2 Hundred's digit: X3 Thousand's digit: X4 Ten thousand's digit: X5	00000	★
F4.17	Effective mode selection of X terminal 2	0:High level effective 1: Low level effective Unit's digit: X6 Ten's digit: X7 Hundred's digit: X8 Thousand's digit: X9 Ten thousand's digit: X10	00000	★
F4.18	Functional selection of AI1 terminal as X	0～60	0	★
F4.19	Functional selection of AI2 terminal as X	0～60	0	★
F4.20	Functional selection of panel potentiometer terminal as X	0～60	0	★

F4.21	AI terminal is X, the effective mode is F4.21.	0:High level effective 1: Low level effective Unit's digit: AI1 Ten's digit: AI2 Hundred's digit: Panel potentiometer	000	★
F4.29	DOR output function selection	0: No output 1: Frequency converter in operation 2: Fault output (fault outage) 3: Frequency level detection FDT1 output 4: Frequency arrives 5: Zero speed operation (no output when shutdown)	3	☆
F4.30	Functional selection of control board relay (TA-TB-TC)	6: Motor overload forecasting warning 7: Frequency converter overload warning 8: Set the numeric arrives 9: Designated numeric arrives 10:Length arrives 11:PLC cycle completion 12: Accumulated runtime arrives 13: Frequency limit 14: Torque limitation 15: Ready for operation 16:AI1>AI2 17: Upper limit frequency arrives 18: Lower limit frequency arrives (operation related) 19: Under-voltage state output	2	☆
F4.31	Relay output function selection (PA-PB-PC)	20: Communication setting 21:FDT2 non-standard output 22: Reserved 23: Zero speed operation 2 (output when shut down) 24:Cumulative power-on time Arrives 25:Frequency level detection FDT2 output 26:Frequency 1 arrives at output 27:Frequency 2 arrives at output	1	☆
F4.32	Y1 output function selection	28: Current 1 arrives output 29: Current 2 arrives output	1	☆

		30:Timely arrival at output 31:AI1 input overrun 32: Downloading 33: In reverse operation 34:Zero current state 35: Module temperature arrives 36: Output current overrun 37: Lower limit frequency arrives (outage also) 38: Alarm output (continue running) 39: Motor overtemperature forecast warning 40:The run time arrives 41: Fault output (coast to stop fault, and under-voltage no output)		
F4.33	Y2 output function selection	Ditto	1	☆
F4.34	Y3 output function selection	Ditto	1	☆
F4.35	DOR output delay time	0.0s～3600.0s	0.0s	☆
F4.36	Relay1 (TA/B/C) output delay time	0.0s～3600.0s	0.0s	☆
F4.37	Relay2 (FA/B/C) output delay time	0.0s～3600.0s	0.0s	☆
F4.38	Y1 output delay time	0.0s～3600.0s	0.0s	☆
F4.39	Y2 output delay time	0.0s～3600.0s	0.0s	☆
F4.40	Y3 output delay time	0.0s～3600.0s	0.0s	☆
F4.41	Y output effective State selection 1	0: Positive logic 1: Negative logic Unit’s digit: DOR Ten’s digit: RELAY1 (TA/B/C) Hundred’s digit: RELAY2 (PA/B/C) Thousand’s digit: Y1 Ten thousand’s digit: Y2	00000	☆
F4.42	Y output effective State selection 2	0: Positive logic 1: Negative logic Unit’s digit: Y3	00000	☆
F4.54	Frequency detection value (FDT1)	0.00Hz~maximum frequency	50.00Hz	☆

F4.55	Frequency detection delay value (FDT1)	0.0%-100.0%(FDT1 Level)	5.0%	☆
F4.56	Frequency to Detection Width	0.0% - 100.0% (maximum frequency)	0.0%	☆
F4.57	Frequency detection value (FDT 2)	0.00Hz~maximum frequency	50.00Hz	☆
F4.58	Frequency detection delay value (FDT2)	0.0%-100.0%(FDT2 level)	0.0%	☆
F4.59	Arbitrary arrival frequency detection value	0.00Hz~maximum frequency	50.00Hz	☆
F4.60	Arbitrary arrival frequency detection width 1	0.0% - 100.0% (maximum frequency)	0.0%	☆
F4.61	Arbitrary arrival frequency detection value 2	0.00Hz~maximum frequency	50.00Hz	☆
F4.62	Arbitrary arrival frequency detection width 2	0.0% - 100.0% (maximum frequency)	0.0%	☆
F4.63	Zero current detection level	0.0%-300.0% 100.0% corresponds to rated current of motor	5.0%	☆
F4.64	Zero current detection delay time	0.01s～600.00s	0.10s	☆
F4.65	Output current out of limit	0.0% (not tested) 0.1%-300.0%(rated current of motor)	200.0%	☆
F4.66	Delay time of over-limit detection of output current	0.00s～600.00s	0.00s	☆
F4.67	Arbitrary arrival current 1	0.1%-300.0%(rated current of motor)	100.0%	☆
F4.68	Arbitrary arrival current 1 width	0.1%-300.0%(rated current of motor)	0.0%	☆
F4.69	Arbitrary arrival current 2	0.1%-300.0%(rated current of motor)	100.0%	☆
F4.70	Arbitrary arrival current 2 width	0.1%-300.0%(rated current of motor)	0.0%	☆
F4.71	AI1 lower limit of	0.00V～F4.72	3.10V	☆

	input voltage protection value			
F4.72	AI1 upper limit of input voltage protection value	F4.71～10.00V	6.80V	☆
F4.73	Module temperature arrival	0℃～100℃	75℃	☆
F5 Input and Output Function Terminal Group				
F5.00	AI1 selection of input voltage/current signal	0:0-10V voltage or 0-20mA 1: 4～20mA 1:4~20mA	0	☆
F5.01	AI curve 1 minimum input	0.00V～F5.03	0.00V	☆
F5.02	AI curve 1 minimum input correspondence setting	-100.0%～+100.0%	0.0%	☆
F5.03	AI curve 1 maximum input	F5.01～+10.00V	10.00V	☆
F5.04	AI curve 1 maximum input correspondence setting	-100.0%～+100.0%	100.0%	☆
F5.05	AI1 filtering time	0.00s～10.00s	0.10s	☆
F5.06	AI2 selection of input voltage/current signal	0:0-10V voltage or 0-20mA 1: 4～20mA 1:4~20mA	0	☆
F5.07	AI curve 2 minimum input	0.00V～F5.09	0.00V	☆
F5.08	AI curve 2 minimum input correspondence setting	-100.0%～+100.0%	0.0%	☆
F5.09	AI curve 2 maximum input	F5.07～+10.00V	10.00V	☆
F5.10	AI curve 2 maximum input correspondence setting	-100.0%～+100.0%	100.0%	☆
F5.11	AI2 filtering time	0.00s～10.00s	0.10s	☆
F5.12	AI curve 3 minimum input	-10.00V～F5.14	-9.50V	☆

F5.13	AI curve 3 minimum input correspondence setting	0.0%～+100.0%	-100.0%	☆
F5.14	Maximum input of panel potentiometer	F5.12～+10.00V	9.50V	☆
F5.15	Panel potentiometer maximum input correspondence setting	-100.0%～+100.0%	100.0%	☆
F5.16	Panel potentiometer filtering time	0.00s～10.00s	0.10s	☆
F5.17	PULSE minimum input	0.00kHz～F5.19	0.00	☆
F5.18	PULSE minimum input correspondence setting	-100.0%～100.0%	0.0%	☆
F5.19	PULSE maximum input	F5.17～100.00kHz	50.00kHz	☆
F5.20	PULSE maximum input setting	-100.0%～100.0%	100.0%	☆
F5.21	PULSE filtering time	0.00s～10.00s	0.10s	☆
F5.22	AI curve selection	Unit's digit: AI1 curve selection 1: Curve 1 (2 points, see F5.01-F5.04) 2: Curve 2 (2 points, see F5.07-F5.10) 3: Curve 3 (2 points, see F5.12-F5.15) 4: Curve 4 (4 points, see A6.00-A6.07) 5: Curve 5 (4 points, see A6.08-A6.15) Ten's digit: AI2 curve selection, ibid. Hundred's digit: Panel potentiometer curve selection, ibid.	321	☆
F5.23	AI lower than minimum input setting	Unit's digit: AI1 lower than minimum input setting selection 0: Corresponding minimum input setting 1:0.0% Ten's digit: AI2 below the minimum input setting option, ibid. Hundred's digit: Panel potentiometer below minimum input setting option, ibid.	000	☆

F5.24	DO terminal output mode selection	0: Pulse output (DOP) 1: Switch output (DOR)	1	☆
F5.25	DOP output maximum frequency	0.01kHz～100.00kHz	50.00kHz	☆
F5.26	DOP output function selection	0: Operating frequency 1: Setting frequency 2: Output current 3: Output torque 4: Output power 5: Output voltage 6: PULSE input (100.0% corresponds to 100.0 kHz) 7:AI1 8:AI2 9: Panel potentiometer (expansion card) 10:Length 11: Numbering 12: Communication setting 13: Motor speed 14: Output current (100.0% corresponds to 1000.0 A) 15: Output voltage (100.0% corresponds to 1000.0 V) 16: Reserved	0	☆
F5.27	AO1 output function selection	0: Operating frequency 1: Setting frequency 2: Output current 3: Output torque 4: Output power 5: Output voltage 6: PULSE input (100.0% corresponds to 100.0 kHz) 7:AI1 8:AI2 9: Panel potentiometer 10:Length 11: Numbering 12: Communication setting	0	☆

		13: Motor speed 14: Output current (100.0% corresponds to 1000.0 A) 15: Output voltage (100.0% corresponds to 1000.0 V) 16: Reserved		
F5.28	AO2 output function selection	Same as F5.27	1	☆
F5.29	AO1 selection of output voltage/current signal	0:0-10V or 0-20mA 1: 4～20mA 1:4~20mA	0	☆
F5.30	AO1 zero bias coefficient	-100.0%～+100.0%	0.0%	☆
F5.31	AO1 gain	-10.00～+10.00	1.00	☆
F5.32	AO2 zero bias coefficient	-100.0%～+100.0%	0.0%	☆
F5.33	AO2 gain	-10.00～+10.00	1.00	☆
F5.34	AO2 selection of output voltage/current	0:0-10V or 0-20mA 1: 4～20mA	0	☆
F6 Group Start/Stop Control				
F6.00	Start-up mode	0: Direct start 1: Speed tracking restart 2: Pre-excitation start-up (AC asynchronous machine)	0	☆
F6.01	Speed tracking mode	0: Start with downtime frequency 1: Start at zero speed 2: Start with the maximum frequency	0	★
F6.02	Speed tracking speed	1～100	20	☆
F6.03	Start-up frequency	0.00Hz～10.00Hz	0.00Hz	☆
F6.04	Start frequency holding time	0.0s～100.0s	0.0s	★

F6.05	Start DC brake current/preexcitation current	0%～100%	0%	★
F6.06	Start DC brake time/preexcitation time	0.0s～100.0s	0.0s	★
F6.07	Shutdown mode	0: Deceleration to stop 1: Coast to stop	0	☆
F6.08	Shutdown starting frequency of DC brake	0.00Hz～maximum frequency	0.00Hz	☆
F6.09	DC brake waiting time	0.0s～100.0s	0.0s	☆
F6.10	Shutdown DC brake current	0%～100%	0%	☆
F6.11	Shutdown DC brake current	0.0s～100.0s	0.0s	☆
F6.12	Brake usage rate	0%～100%	100%	☆
F7 Keyboard and Display Function Group				
F7.02	LED operation monitoring parameter display selection 1	0000-1111 Unit’s digit: L0.00 - operating frequency 1 (Hz) Ten’s digit: L0.01 - set frequency (Hz) Hundred’s digit: L0.02 - bus voltage Thousand’s digit: L0.03 - output voltage 0:No display 1:Display	0101	☆
F7.03	LED operation monitoring parameter display selection 2	0000-1111 Unit’s digit: L0.04 - output current (A) Ten’s digit: L0.05 - output power (kw) Hundred’s digit: L0.06 - output torque (%) Thousand’s digit: L0.07-X input state 0:No display 1:Display	0001	☆

F7.04	LED operation monitoring parameter display selection 3	0000-1111 Unit's digit: L0.08-Y output state Ten's: digit L0.09-AI1 voltage (V) Hundred's digit: L0.10-AI2 voltage (V) Thousand's digit: L0.11 - panel potentiometer voltage (V) 0:No display 1:Display	0000	☆
F7.05	LED operation monitoring parameter display selection 4	0000-1111 Unit's digit: L0.12 - count value Ten's digit: L0.13 - length value Hundred's digit: L0.14 - load speed display Thousand's digit: L0.15-PID setting 0:No display 1:Display	0100	☆
F7.06	LED operation monitoring parameter display selection 5	0000-1111 Unit's digit: L0.16-PID feedback Ten's digit: L0.17-PLC stage Hundred's digit: Reserved Thousand's digit: L0.19 - operating frequency 2 (Hz) 0:No display 1:Display	0000	☆
F7.07	LED operation monitoring parameter display selection 6	0000-1111 Unit's digit: L0.20 - Remaining runtime Ten's digit: L0.21-AI1 pre-correction voltage (V) Hundred's digit: L0.22-AI2 pre-correction voltage (V) Thousand's digit: L0.23 - panel potentiometer precorrection voltage (V) 0:No display 1:Display	0000	☆
F7.08	LED operation monitoring parameter display selection 7	0000-1111 Unit's digit: L0.24 - linear speed Ten's digit: L0.25 - current power-on time (hour) Hundred's digit: L0.26 - current runtime (min) Thousand's digit: Reserved 0:No display	0000	☆

		1:Display		
F7.09	LED operation monitoring parameter display selection 8	0000-1111 Unit's digit: L0.28 - communication setting Ten's digit: Reserved Hundred's digit: L0.30 - main frequency X display (Hz) Thousand's digit: L0.31 - auxiliary frequency Y display (Hz) 0: No display 1:Display	0000	☆
F7.12	LED downtime parameter display selection 1	0000-1111 Unit's digit: L0.01 - set frequency (Hz) Ten's digit: L0.02 - bus voltage (V) Hundred's digit: L0.07-X input state Thousand's digit: L0.08-Y output state 0: No display 1:Display	0011	☆
F7.13	LED downtime parameter display selection 2	0000-1111 Unit's digit: L0.09-AI1 voltage (V) Ten's digit: L0.10-AI2 voltage (V) Hundred's digit: L0.11 - panel potentiometer voltage (V) Thousand's digit: L0.12 - Count Value 0:No display 1:Display	0000	☆
F7.14	LED downtime parameter display selection 3	0000-1111 Unit's digit: L0.13 - length value Ten's digit: L0.17 - PLC stage Hundred's digit: L0.14 - load speed Thousand's digit: L0.15 - PID setting 0: No display 1:Display	0000	☆
F7.15	LED downtime parameter display selection 4	0000-1111 Unit's digit: Reserved Ten's digit: L0.16 - PID feedback Hundred's digit: Reserved Thousand's digit: Reserved 0: No display 1:Display	0000	☆

F7.17	Second digital tube operation display Initial monitoring parameters	0-62, of which 0 corresponds to L0.00. 62 corresponds to L0.62, etc.	4	☆
F7.18	Second digital tube down displays initial monitoring parameters	0-62, of which 0 corresponds to L0.00. 62 corresponds to L0.62, etc.	2	☆
F7.22	Load speed display coefficient	0.01～200.00	100.00%	☆
F7.23	Load speed display decimal points	0:0 decimal digit 1:1 decimal digit 2:2 decimal digits 3:3 decimal digits	0	☆
F7.24	Inverter module radiator temperature	0.0℃～100.0℃	-	●
F7.25	Rectifier module radiator temperature	0.0℃～100.0℃	-	●
F7.26	Reserved	-	-	●
F7.27	Cumulative running time	0h～65535 hours	-	●
F7.28	Cumulative power-on time	0h～65535 hours	-	●
F7.29	Product ID	-	-	●
F7.30	Functional software version number	-	-	●
F7.31	Cumulative power consumption	0～65535 degrees	-	●
F7.32	Output power correction coefficient	0.00%～200.00%	100.00%	☆
Group F8 Auxiliary Functional Terminal Group				
F8.00	Forward and reverse dead zone time	0.0s～3000.0s	0.0s	☆
F8.01	Frequency 1	0.00Hz～maximum frequency	10.00Hz	☆
F8.02	Frequency 2	0.00Hz～maximum frequency	15.00Hz	☆
F8.03	Frequency 3	0.00Hz～maximum frequency	20.00Hz	☆
F8.04	Frequency 4	0.00Hz～maximum frequency	25.00Hz	☆
F8.05	Frequency 5	0.00Hz～maximum frequency	30.00Hz	☆
F8.06	Frequency 6	0.00Hz～maximum frequency	35.00Hz	☆

F8.07	Frequency 7	0.00Hz～maximum frequency	40.00Hz	☆
F8.16	Acceleration time 2	0.0s～6500.0s	Type dependant	☆
F8.17	Deceleration time 2	0.0s～6500.0s	Type dependant	☆
F8.18	Acceleration time 3	0.0s～6500.0s	Type dependant	☆
F8.19	Deceleration time 3	0.0s～6500.0s	Type dependant	☆
F8.20	Acceleration time 4	0.0s～6500.0s	Type dependant	☆
F8.21	Deceleration time 4	0.0s～6500.0s	Type dependant	☆
F8.23	Jump frequency 2	0.00Hz~maximum frequency	0.00Hz	☆
F8.24	Jump frequency amplitude	0.00Hz~maximum frequency	0.01Hz	☆
F8.25	Droop control	0.00Hz～10.00Hz	0.00Hz	☆
F8.26	Cooling fan control	0:Running fan 1: The fan is running all the time.	0	☆
F8.27	Sets Cumulative Power-on arrival time	0h～65000h	0h	☆
F8.28	Set accumulated running arrival time	0h～65000h	0h	☆
F8.29	Acceleration and deceleration process jump frequency valid or invalid	0: Invalid 1: Valid	0	☆
F8.30	Acceleration time 1 / acceleration time 2 switch frequency points	0.00Hz~maximum frequency	0.00Hz	☆
F8.31	Deceleration time 1/ deceleration time 2 switch frequency points	0.00Hz~maximum frequency	0.00Hz	☆
F8.32	Timing function selection	0: Invalid 1: Valid	0	☆
F8.33	Timing runtime selection	0:F8.34 setting 1:AI1 2:AI2	0	☆

		3: Analog input range of panel potentiometer corresponds to F8.34		
F8.34	Timing running time	0.0min～6500.0min	0.0min	☆
F8.35	Arrival time setting for this operation	0.0min～6500.0min	0.0min	☆
F8.36	Command source binding frequency instruction	Unit's digit: Operating panel command binding frequency instruction selection 0: Unbound 1: Digital setting frequency 2:AI1 3:AI2 4: Panel potentiometer 5:PULSE pulse setting (X5) 6:Multistage speed 7: Simple PLC 8:PID 9: Communication given Ten's digit: Terminal command binding frequency instruction selection Hundred's digit: Communication command binding frequency instruction selection Thousand's digit: Auto run binding frequency instruction selection	0000	☆
F8.38	DPWM switching Upper limit frequency	0.00Hz～320.00Hz	12.00Hz	☆
F8.39	PWM modulation mode	0: Asynchronous modulation 1: Synchronous modulation	0	☆
F8.40	Selection o f dead Zone compensation mode	0: No compensation 1: Compensation mode 1 2: Compensation mode 2	1	☆
F8.41	Random PWM depth	0: Random PWM is invalid 1-10:PWM carrier frequency random depth	0	☆
F8.42	Fast current limit energy	0: Not enable 1: Enable	1	☆
F8.43	Current detection compensation	0～100	5	☆
F8.44	SVC optimal mode selection	0: No optimization 1: Optimizing mode 1	1	☆

		2: Optimizing mode 2		
F8.45	Dead zone time adjustment	100%～200%	150%	☆
F8.46	Overvoltage point setting	200.0-2500.0V	Type dependant	★
Group F9 Closed-loop PID and Constant Pressure Water Supply Special Parameter Group				
F9.00	PID given source	0:F9.01 setting 1:AI1 2:AI2 3: Panel potentiometer 4:PULSE pulse setting (X5) 5: Communication given 6: Given multi-segment instructions	0	☆
F9.01	PID the value given	0.000～F9.04 (Mpa)	0.200	☆
F9.02	Feedback source	0:AI1 1:AI2 2: Panel potentiometer 3:AI1-AI2 4:PULSE pulse setting (X5) 5: Communication given 6:AI1+AI2 7: MAX (| AI1 |, | AI2 |) 8: MIN (| AI1 |, | AI2 |)	0	☆
F9.03	PID action direction	0: Positive effect 1: Reaction	0	☆
F9.04	PID given feedback (distance pressure gauge range for water supply)	0.00-655.35 (water supply Mpa)	1.00	☆
F9.05	Proportional gain KP1	0.0～100.0	35.0	☆
F9.06	Integral time Ti1	0.01s～10.00s	0.50s	☆
F9.07	Differential time Td1	0.000s～10.000s	0.000s	☆
F9.08	Reverse cut-off frequency	0.00～maximum frequency	0.00Hz	☆
F9.09	PID deviation limit	0.0%～100.0%	0.0%	☆
F9.10	PID differential limitation	0.00%～100.00%	0.10%	☆

F9.11	PID given change time	0.00～650.00s	0.00s	☆
F9.12	PID feedback filtering time	0.00～60.00s	0.00s	☆
F9.13	PID output filtering time	0.00～60.00s	0.00s	☆
F9.14	PID downtime given initial value	0: Actual PID setting 1: Equivalent to F9.21, used in conjunction with F9.11	0	☆
F9.15	Proportional gain KP2	0.0～100.0	20.0	☆
F9.16	Integral time Ti2	0.01s～10.00s	2.00s	☆
F9.17	Differential time Td2	0.000s～10.000s	0.000s	☆
F9.18	PID parameter switching conditions	0: No switching 1: Switching through X-terminal 2: Automatic switching according to deviation	0	☆
F9.19	PID Parameter Switching Deviation 1	0.0%～F9.20	20.0%	☆
F9.20	PID parameter switching deviation 2	F9.19～100.0%	80.0%	☆
F9.21	PID initial value	0.0%～100.0%	0.0%	☆
F9.22	PID initial holding time	0.00～650.00s	0.00s	☆
F9.23	Two output deviation positive maximum	0.00%～100.00%	1.00%	☆
F9.24	Two output deviations reverse maximum	0.00%～100.00%	1.00%	☆
F9.25	PID integral attribute	Unit’s digit: Integral separation 0: Invalid 1: Valid Ten’s digit: Whether to Stop integral after output to limit value 0: Continue to integrate 1: Stop integral	00	☆
F9.26	PID feedback loss detection value	0.0%: Loss of feedback without judgment 0.1%～100.0％ 0.1%-100.0%	0.0%	☆
F9.27	PID feedback loss detection value	0.0s～20.0s	0.0s	☆

F9.28	PID shutdown operation	0: Stop without operation 1: Downtime operation	0	☆
F9.36	Recovery coefficient	0.0%-100.0% (relative to the target force percentage) pressure recovery calculated by multiplying F9.36 by F9.01	75.0%	☆
F9.37	Delayed recovery time	0.0s～6500.0s	0.0s	☆
F9.38	Sleep frequency	0.00Hz to maximum frequency (frequency converter belongs to sleep state, LED digital tube will display SLP)	38.00Hz	☆
F9.39	Sleep delay time	0.0s～6500.0s	0.0s	☆
F9.40	Water supply sleep tolerance	0.0%-100.0%, which is the corresponding percentage of the given pressure. See chapter VI, F9.38, F9.39 for details.	20.0%	☆
F9.41	Closed-loop PID monitoring mode function selection of keyboard UP/DOWN	In the closed-loop PID mode, this function is effective. In the non-closed-loop PID mode, this function code is invalid. 0: Keyboard frequency is set to adjust 1:PID digital setting adjustment	1	☆
F9.42	Constant pressure water supply model selection	0:One drag multi -constant-pressure water supply mode is invalid 1: Choose Y1 and Y3 as one-drag-two water supply mode (one-use-one-equipment) 2: Choose Y1, Y2, Y3, DO one drag two-cycle constant pressure water supply mode to be effective (one with one supplement, Y1 controls the first pump frequency conversion, Y2 controls the first pump frequency conversion, Y3 controls the second pump frequency conversion, DO controls the second pump frequency conversion)	0	★
F9.43	Timing rotation interval	0-65535 minutes 0 Indicates invalid timing rotation	0	☆
F9.44	Pump addition judgment time	0.0～6553.5s	5.0s	☆
F9.45	Pump reduction judgment time	0.0～6553.5s	3.0s	☆
F9.46	Electromagnetic switch delay time	0.1～10.0s	0.5s	☆
F9.47	Frequency converter	0.1～20.0s	1.0s	☆

	pump input delay time			
F9.48	High pressure achieves monitoring point	0.0～100.0%	100.0%	☆
F9.49	Low pressure achieves monitoring point	0.0～100.0%	0.0%	☆
F9.50	Delay of water shortage detection	0.1～999.9s	0.0s	☆
F9.51	Water deficiency detection current	0.0-100.0% (Relative to motor rated current)	0.0%	☆
F9.52	Water supply card mode Y1 output function	0: Water supply mode is invalid, Y1 can be used as other general frequency converter functions. 1: Water supply mode is effective, one drag two water supply, one uses Y1 as the first pump frequency conversion control, and one uses Y1 as the first pump frequency conversion control.	0	★
F9.53	Water supply card mode Y2 output function	0: Water supply mode is invalid, Y2 can be used as other general frequency converter functions. 1: Water supply mode is effective, one drag two water supply, one supplement Y2 as the first pump power frequency control.	0	★
F9.54	Water supply card mode Y3 output function	0: Water supply mode is invalid, Y3 can be used as other general frequency converter functions. 1: Water supply mode is effective, one drag two water supply, one uses Y3 as the first pump frequency conversion control, and one uses Y3 as the first pump frequency conversion control.	0	★
F9.55	Water supply card mode DO output function	0: Water supply mode is invalid, DO can be used as other general purpose frequency converter functions. 1: The water supply mode is effective, one drag two water supply, one supplement DO as the first pump power frequency control.	0	★
F9.56	Water deficiency protection function	0: Close 1: Open, judge by frequency (F9.58), pressure (outlet pressure), current (actual current of motor). When the output frequency is greater than or equal to F9.58, feedback pressure is less than F9.57, and the percentage of output current is less than F9.59. After meeting the above three	0	☆

		conditions, delay F9.62, report E069 (water shortage fault). 2: Open and judge by outlet pressure. When feedback pressure is less than F9.57, delay F9.62 and report E069 (Water shortage fault) 3: Open and judge the pressure of the intake (Sensor is needed for the intake). When the pressure of the intake is less than F9.57, delay F9.62 and report E069 (water shortage fault)		
F9.57	Water deficiency fault detection threshold	0.00 Mpa~F9.04 When the feedback pressure is less than this set value, the water shortage judgment is made.	0.05Mpa	☆
F9.58	Water loss protection detection frequency	0.00~upper limit frequency F9.56 = 1 is valid to determine the comparative frequency of water shortage	50.00Hz	☆
F9.59	Water deficiency protection percentage of detection current	0.0-100.0% F9.56 = 1 is valid, the percentage of rated current of motor	40.0%	☆
F9.60	Water loss protection automatic restart delay	0-9999 minutes	15 minutes	☆
F9.61	Water loss protection automatic reset number	After the water shortage fault is reported from 0 to 50, after F9.60 time, the frequency converter automatically resets and operates. The reset times are limited by F9.61. When the reset times are reached, the water shortage fault can not be automatically cleared, and the fault should be reset manually according to RESET. If F9.61 is set to 9999, the water shortage fault can be reset indefinitely	10	☆
F9.62	Water loss alarm detection time	0.0~120.0S	15.0S	☆
Group FA Multi-section Instructions, Simple PLC, Swing Frequency, Fixed Length and Counting				
FA.00	Multi-section instruction 0	-100.0%～100.0%	0.0%	☆
FA.01	Multi-section instruction 1	-100.0%～100.0%	0.0%	☆
FA.02	Multi-section instruction 2	-100.0%～100.0%	0.0%	☆

FA.03	Multi-section instruction 3	-100.0%～100.0%	0.0%	☆
FA.04	Multi-section instruction 4	-100.0%～100.0%	0.0%	☆
FA.05	Multi-section instruction 5	-100.0%～100.0%	0.0%	☆
FA.06	Multi-section instruction 6	-100.0%～100.0%	0.0%	☆
FA.07	Multi-section instruction7	-100.0%～100.0%	0.0%	☆
FA.08	Multi-section instruction 8	-100.0%～100.0%	0.0%	☆
FA.09	Multi-section instruction 9	-100.0%～100.0%	0.0%	☆
FA.10	Multi-section instruction 10	-100.0%～100.0%	0.0%	☆
FA.11	Multi-section instruction11	-100.0%～100.0%	0.0%	☆
FA.12	Multi-section instruction12	-100.0%～100.0%	0.0%	☆
FA.13	Multi-section instruction13	-100.0%～100.0%	0.0%	☆
FA.14	Multi-section instruction14	-100.0%～100.0%	0.0%	☆
FA.15	Multi-section instruction15	-100.0%～100.0%	0.0%	☆
FA.16	Multi-section instruction 0 given mode	0: Function code FA.00 given 1:AI1 2:AI2 3: Panel potentiometer 4:PULSE pulse 5:PID 6: Given the preset frequency (F0.09), UP/DOWN can be modified.	0	☆
FA.17	Simple PLC operation mode	0: Stop at the end of single operation 1: Keep the final value at the end of a single run 2: Continuous cycle	0	☆
FA.18	Simple PLC power-off	Unit’s digit: Power-down memory selection	00	☆

	Memory selection	0: Power failure, no memory 1: Power-off memory Ten's digit: Downtime memory selection 0: No memory of downtime 1: Downtime memory		
FA.19	Simple PLC section 0 running time	0.0s（h）～6553.5s（h）	0.0s（h）	☆
FA.20	Simple PLC selection of acceleration / deceleration time in section 0	0～3	0	☆
FA.21	Simple PLC Section 1 Running Time	0.0s（h）～6553.5s（h）	0.0s（h）	☆
FA.22	Simple PLC selection of acceleration / deceleration time in section 1	0～3	0	☆
FA.23	Simple PLC section 2 running time	0.0s（h）～6553.5s（h）	0.0s（h）	☆
FA.24	Simple PLC selection of acceleration / deceleration time in section 2	0～3	0	☆
FA.25	Simple PLC section 3 running time	0.0s（h）～6553.5s（h）	0.0s（h）	☆
FA.26	Simple PLC selection of acceleration / deceleration time in section 3	0～3	0	☆
FA.27	Simple PLC Section 4 Running Time	0.0s（h）～6553.5s（h）	0.0s（h）	☆
FA.28	Simple PLC selection of acceleration / deceleration time in section 4	0～3	0	☆
FA.29	Simple PLC section 5 running time	0.0s（h）～6553.5s（h）	0.0s（h）	☆
FA.30	Simple PLC selection of acceleration /	0～3	0	☆

	deceleration time in section 5			
FA.31	Simple PLC section 6 running time	0.0s（h）～6553.5s（h）	0.0s（h）	☆
FA.32	Simple PLC selection of acceleration / deceleration time in section 6	0～3	0	☆
FA.33	Simple PLC section 7 running time	0.0s（h）～6553.5s（h）	0.0s（h）	☆
FA.34	Simple PLC selection of acceleration / deceleration time in section 7	0～3	0	☆
FA.35	Simple PLC section 8 running time	0.0s（h）～6553.5s（h）	0.0s（h）	☆
FA.36	Simple PLC selection of acceleration / deceleration time in section 8	0～3	0	☆
FA.37	Simple PLC section 9 running time	0.0s（h）～6553.5s（h）	0.0s（h）	☆
FA.38	Simple PLC selection of acceleration / deceleration time in section 9	0～3	0	☆
FA.39	Simple PLC section 10 running time	0.0s（h）～6553.5s（h）	0.0s（h）	☆
FA.40	Simple PLC selection of acceleration / deceleration time in section 10	0～3	0	☆
FA.41	Simple PLC section 11 running time	0.0s（h）～6553.5s（h）	0.0s（h）	☆
FA.42	Simple PLC selection of acceleration / deceleration time in section 11	0～3	0	☆

FA.43	Simple PLC section 12 running time	0.0s（h）～6553.5s（h）	0.0s（h）	☆
FA.44	Simple PLC selection of acceleration / deceleration time in section 12	0～3	0	☆
FA.45	Simple PLC section 13 running time	0.0s（h）～6553.5s（h）	0.0s（h）	☆
FA.46	Simple PLC selection of acceleration / deceleration time in section 13	0～3	0	☆
FA.47	Simple PLC section 14 running time	0.0s（h）～6553.5s（h）	0.0s（h）	☆
FA.48	Simple PLC selection of acceleration / deceleration time in section 14	0～3	0	☆
FA.49	Simple PLC section 15 running time	0.0s（h）～6553.5s（h）	0.0s（h）	☆
FA.50	Simple PLC selection of acceleration / deceleration time in section 15	0～3	0	☆
FA.51	Simple PLC running time unit	0：s（second） 1：h（hours）	0	☆
FA.52	Swing frequency setting mode	0: Relative to center frequency 1: Relative to maximum frequency	0	☆
FA.53	Pendulum amplitude	0.0%～100.0%	0.0%	☆
FA.54	Sprint frequency amplitude	0.0%～50.0%	0.0%	☆
FA.55	Pendulum frequency period	0.1s～3000.0s	10.0s	☆
FA.56	Pendulum frequency triangular wave rising time	0.1%～100.0%	50.0%	☆
FA.57	Setting length	0m～65535m	1000m	☆
FA.58	Real length	0m～65535m	0m	☆

FA.59	Pulse number per meter	0.1～6553.5	100.0	☆
FA.60	Setting count value	1～65535	1000	☆
FA.61	Specified count value	1～65535	1000	☆
Group Fb Fault and Protection				
Fb.00	Motor overload protection selection	0: Prohibition 1: Permission	1	☆
Fb.01	Motor overload protection gain	0.20～10.00	1.00	☆
Fb.02	Motor overload warning coefficient	50%～100%	80%	☆
Fb.03	Overvoltage stall gain	0～100	0	☆
Fb.04	Overvoltage stall protection voltage/energy consumption braking initial voltage	120%～150%	130%	☆
Fb.05	Overflow stall gain	0～100	20	☆
Fb.06	Overflow stall protection current	100%～200%	150%	☆
Fb.07	Power-on short circuit protection to ground selection	0: Invalid 1: Valid	1	☆
Fb.08	Faults automatic reset number	0～20	0	☆
Fb.09	During fault automatic reset, Y action selection	0: No Action 1:Action	0	☆
Fb.10	Fault automatic reset interval	0.1s～100.0s	1.0s	☆
Fb.11	Input phase loss and input line fault protection selection	Unit’s digit: Selection of input phase-out protection Ten’s digit: Selection of input line fault protection 0: Prohibition 1: Permission	11	☆
Fb.12	Selection of output loss protection	0: Prohibition 1: Permission	1	☆
Fb.13	Fault protection action	Unit’s digit: Motor overload (11)	00000	☆

	selection 1	0: Coast to stop 1: Shut down by shutdown mode 2: Continue to operation Ten's digit: Input phase loss(12) Hundred's digit: Output phase shortage (13) Thousand's digit: External fault (15) Ten thousand's digit: Abnormal communication (16)		
Fb.14	Fault protection action selection 2	Unit's digit: Encoder/PG card abnormality (20) 0: Coast to stop Ten's digit: Functional code reading and writing abnormalities (21) 0: Coast to stop 1: Shut down by shutdown mode Hundred's digit: Reserved Thousand's digit: Motor overheating (25) Ten Thousand's digit: Reserved	00000	☆
Fb.15	Fault protection action selection 3	Unit's digit: User-defined fault 1 (27) 0: Coast to stop 1: Shut down by shutdown mode 2: Continue to operation Ten's digit: User defined fault 2 (28) 0: Coast to stop 1: Shut down by shutdown mode 2: Continue to operation Hundred's digit: Power-on time arrives (29) 0: Coast to stop 1: Shut down by shutdown mode 2: Continue to operation Thousand's digit: Download (30) 0: Coast to stop 1: Slow down and Stop 2: Slow down to 7% of the rated frequency of the motor and continue to operate. Automatically restore to set frequency operation without download Ten thousand's digit: Loss of PID feedback at running time (31) 0: Coast to stop	00000	☆

		1: Shut down by shutdown mode 2: Continue to operation		
Fb.16	Fault protection action selection 4	Unit's digit: Excessive speed deviation (42) 0: Coast to stop 1: Shut down by shutdown mode 2: Continue to operation Ten's digit: Motor overspeed (43) Hundred's digit: Initial position error (51) Thousand's digit: Speed feedback error (52)	00000	☆
Fb.20	Fault continuing operation frequency selection	0: Running at current operating frequency 1: Running at setting frequency 2: Operating at the upper limit frequency 3: Running at the lower frequency limit 4: Running at abnormal reserve frequency	0	☆
Fb.21	Abnormal reserve frequency	0.0% - 100.0% (100.0% corresponds to the maximum frequency)	100.0%	☆
Fb.22	Motor temperature sensor types	0: No temperature sensor 1:PT100 1:PT100 2:PT1000 2:PT1000	0	☆
Fb.23	Motor overheat protection threshold	0℃～200℃	110℃	☆
Fb.24	Motor overheating warning threshold	0℃～200℃	90℃	☆
Fb.26	Instantaneous power failure action selection	0: Invalid 1: Deceleration 2: Deceleration to stop	0	☆
Fb.27	Instantaneous stop action pause judgment voltage	80.0%～100.0%	90.0%	☆
Fb.28	Instantaneous outage voltage rise as judgment time	0.00s～100.00s	0.50s	☆
Fb.29	Instantaneous power-off as judgment voltage	60.0%-100.0%(standard bus voltage)	80.0%	☆
Fb.30	Download protection selection	0: Prohibition 1: Permission	0	☆

Fb.31	Download detection level	0.0～100.0%	10.0%	☆
Fb.32	Download detection time	0.0～60.0s	1.0s	☆
Fb.33	Overspeed detection value	0.0% - 50.0% (maximum frequency)	20.0%	☆
Fb.34	Overspeed detection time	0.0s: No detection 0.0s～60.0s 0.0s~60.0s	1.0s	☆
Fb.35	Speed deviation excessive detection value	0.0% - 50.0% (maximum frequency)	20.0%	☆
Fb.36	Speed deviation excessive detection time	0.0s: No detection 0.0s-60.0s	5.0s	☆
Group FC Fault Recording Group				
FC.00	Previous (the latest) fault types	Same as FC.03	—	●
FC.01	The first and second faults types	Same as FC.03	—	●
FC.02	The first three faults types	Same as FC.03	—	●
FC.03	The first four faults types	0: No fault 1: Reserved 2: Accelerated overcurrent 3: Deceleration overcurrent 4: Constant speed overcurrent 5: Accelerated overvoltage 6: Deceleration overvoltage 7: Constant speed overvoltage 8: Control power supply overvoltage (constant speed medium overvoltage) 9:Undervoltage 10: Converter overload	—	●

FC.04	The first five faults types	11: Motor overload 12: Input phase loss 13: Output phase loss 14: Module overheating 15: External failure 16: Communication abnormalities 17: Abnormal input line 18: Current detection abnormality 19: Motor self-learning abnormality 20: Encoder/PG card abnormality 21: Parametric read-write exception 22: Frequency converter hardware abnormality 23: Short circuit between motor and ground 24: Reserved 25: Reserved 26: Reserved 27: User-defined fault 1 28: User-defined fault 2 29:Power-on time arrives 30:Download 31: Loss of PID feedback at running time 40: Fast current limiting and overtime 41: Switching motors at running time 42: Excessive speed deviation 43:Motor overspeed 45:Motor overtemperature 51: Initial position error		
FC.05	The first six faults types			
FC.06	Previous (the latest) fault frequency	—	—	●
FC.07	Previous (the latest) fault current	—	—	●
FC.08	Previous (the latest) fault bus voltage	—	—	●
FC.09	Previous (the latest) fault input terminal status	—	—	●
FC.10	Previous (the latest) fault output terminal status	—	—	●

FC.11	Previous (the latest) fault converter status	—	—	●
FC.12	Previous (the latest) fault power-on time	—	—	●
FC.13	Previous (the latest) fault running time	—	—	●
FC.14	Previous (the latest) fault radiator temperature of converter module	—	—	●
FC.15	Reserved			
FC.16	The first and second faults frequency	—	—	●
FC.17	The first and second faults current	—	—	●
FC.18	The first and second faults bus voltage	—	—	●
FC.19	The first and second faults input terminal status	—	—	●
FC.20	The first and second faults output terminal status	—	—	●
FC.21	The first and second faults converter status	—	—	●
FC.22	The first and second faults power-on time	—	—	●
FC.23	The first and second faults running time	—	—	●
FC.24	The first and second faults converter radiator temperature	—	—	●
FC.26	The first three faults frequency	—	—	●
FC.27	The first three faults current	—	—	●
FC.28	The first three faults bus voltage	—	—	●

FC.29	The first three faults input terminal status	—	—	●
FC.30	The first three faults output terminal status	—	—	●
FC.31	The first three faults converter status	—	—	●
FC.32	The first three faults power-on time	—	—	●
FC.33	The first three faults running time	—	—	●
FC.34	The first three faults converter radiator temperature	—	—	●
FC.35	The first three faults setting frequency	—	—	●
Group Fd Communication Parameters				
Fd.00	Communication baud rate	Unit's digit：MODBUS 0：300BPS 1：600BPS 2：1200BPS 3：2400BPS 4：4800BPS 5：9600BPS 6：19200BPS 7：38400BPS 8：57600BPS 9：115200BPS Ten's digit：Profibus-DP 0：115200BPs 1：208300BPs 2：256000BPs 3：512000Bps Hundred's digit：Reserved Thousand's digit：CANlink baud rate 0：20 1：50 2：100 3：125 4：250	6005	☆

		5：500 6：1M		
Fd.01	MODBUS data format	0: No check (8-N-2) 1: Dual check (8-E-1) 2: Odd check (8-O-1) 3: No check (8-N-1) (MODBUS valid)	0	☆
Fd.02	Local address	0: Broadcast address 1-247 (MODBUS, Profibus, CANlink valid)	1	☆
Fd.03	MODBUS response delay	0ms~20ms (MODBUS valid)	2	☆
Fd.04	Serial communication overtime	0.0 (Invalid), 0.1s-60.0s (MODBUS, Profibus, CANopen valid)	0.0	☆
Fd.05	MODBUS, Profibus-D communications S data format	Unit’s digit: MODBUS 0: Non-standard MODBUS protocol 1: Standard MODBUS protocol Ten’s digit: Profibus-DP 0:PPO1 format 1:PPO 2 format 2: PPO3 format 3: PPO5 format	31	☆
Fd.06	Communication read current resolution	0：0.01A 1：0.1A	0	☆
Fd.07	Principal and subordinate selection	0: Host 1: Slave	0	☆
Fd.08	Reserved			
Fd.15	Serial communication protocol selection	0:Modbus protocol 1:Profibus-DP bridge 2:CANopen bridge	0	☆
Group FE Custom function code				
FE.00	User function code 0	F0.00 ～ FP.xx A0.00 ～ Ax.xx L0.xx ～ L0.xx	F0.01	☆
FE.01	User function code1		F0.02	☆
FE.02	User function code2		F0.09	☆
FE.03	User function code3		F0.20	☆
FE.04	User function code4		F0.21	☆
FE.05	User function code5		F0.49	☆
FE.06	User function code6		F0.50	☆
FE.07	User function code7		F1.00	☆

FE.08	User function code8		F3.00	☆
FE.09	User function code9		F3.01	☆
FE.10	User function code10		F4.01	☆
FE.11	User function code11		F4.02	☆
FE.12	User function code12		F4.03	☆
FE.13	User function code13		F4.04	☆
FE.14	User function code14		F4.05	☆
FE.15	User function code15	F0.00 ～ Fd.xx A0.00 ～ Ax.xx	F4.06	☆
FE.16	User function code16		F4.07	☆
FE.17	User function code17	L0.xx ～ L0.xx	F4.27	☆
FE.18	User function code18		F4.28	☆
FE.19	User function code19		F4.29	☆
FE.20	User function code20	F0.00 ～ Fd.xx A0.00 ～ Ax.xx L0.xx ～ L0.xx	F4.30	☆
FE.21	User function code21		F4.31	☆
FE.22	User function code22		F5.01	☆
FE.23	User function code23		F5.03	☆
FE.24	User function code24		F5.07	☆
FE.25	User function code25		F5.09	☆
FE.26	User function code26		F0.00	☆
FE.27	User function code27		F0.00	☆
FE.28	User function code28		F0.00	☆
FE.29	User function code29		F0.00	☆
FE.30	User function code29		F0.00	☆
FE.31	User function code29		F0.00	☆
Group A0 Second Motor Control				
A0.00	Motor types selection	0: Common asynchronous motor 1: Frequency conversion asynchronous motor	0	★
A0.01	Motor rated power	0.1kw～1000.0kw	Type dependant	★
A0.02	Motor rated voltage	1V～2000V	Type dependant	★
A0.03	Motor rated current	0.01A~655.35A (power ≤ 55kw) 0.1A-6553.5A (power > 55kw)	Type dependant	★
A0.04	Motor rated power	0.01Hz~maximum frequency	Type	★

			dependant	
A0.05	Motor rated speed	1rpm～65535rpm	Type dependant	★
A0.06	Asynchronous motor stator resistance	0.001Ω～65.535Ω (power ≦ 55kw) 0.0001Ω～6.5535Ω (power > 55kW)	Type dependant	★
A0.07	Asynchronous motor rotor resistance	0.001Ω～65.535Ω (power ≦ 55kW) 0.0001Ω～6.5535Ω (power > 55kw)	Type dependant	★
A0.08	Asynchronous motor Leakage inductance	0.01mH～655.35mH（power≦55kw） 0.001mH～65.535mH（power>55kw)	Type dependant	★
A0.09	Asynchronous motor mutual inductance reactance	0.1mH～6553.5mH（power≦55kw） 0.01mH～655.35mH（power>55kw)	Type dependant	★
A0.10	Asynchronous motor no-load current	0.1A～A0.03（power>55kw） 0.1A～A0.03（power>55kw）	Type dependant	★
A0.37	Motor parameters self-learning selection	0: No operation 1: Asynchronous static self-learning 2: Asynchronous machine complete self-learning	0	★
A0.38	Speed loop proportional gain 1	1～100	30	☆
A0.39	Velocity ring integration time 1	0.01s～10.00s	0.50s	☆
A0.40	Switching frequency 1	0.00～A0.43	5.00Hz	☆
A0.41	Velocity loop proportional gain 2	1～100	20	☆
A0.42	Velocity ring integration time2	0.01s～10.00s	1.00s	☆
A0.43	Switching frequency 2	A0.40~maximum frequency	10.00Hz	☆
A0.44	Vector control slip gain	50%～200%	100%	☆
A0.45	Velocity loop filtering time constant	0.000s～0.100s	0.000s	☆
A0.46	Vector control overexcitation gain	0～200	64	☆
A0.47	Torque upper limit source in speed control mode	0:A0.48 setting 1:AI1 2:AI2 3: Panel potentiometer 4:PULSE pulse 5: Communication given	0	☆

		6: MIN (AI1, AI2) 7:MAX (AI1, AI2) Full range of 1-7 options, corresponding to A0.48 digital setting		
A0.48	Torque upper limit digital setting in speed control mode	0.0%～200.0%	150.0%	☆
A0.51	Proportional gain of excitation regulation	0～20000	2000	☆
A0.52	Integral gain of excitation regulation	0～20000	1300	☆
A0.53	Torque regulation proportional gain	0～20000	2000	☆
A0.54	Torque adjustment integral gain	0～20000	1300	☆
A0.55	Integral attribute of velocity loop	Unit's digit: Integral separation 0: invalid 1: valid	0	☆
A0.61	Second motor control mode	0: Sensorless vector control (SVC) 1: Vector control with speed sensor (FVC) 2:V/F control	0	★
A0.62	Selection of the second motor acceleration and deceleration time	0: Same as the first motor 1: Acceleration / deceleration time 1 2: Acceleration / deceleration time 2 3: Acceleration / deceleration time 3 4: Acceleration / deceleration time 4	0	☆
A0.63	Second motor torque Lifting	0.0%: Automatic torque increase 0.1%-30.0%.	Type dependant	☆
A0.65	Second motor oscillation suppression gain	0～100	Type dependant	☆

5.2 Summary of Monitoring Parameters

Function code	Name	Minimum unit	Postal address
Group L0 Basic Monitoring Parameters			
L0.00	Operating frequency (Hz)	0.01Hz	7000H
L0.01	Setting frequency (Hz)	0.01Hz	7001H

L0.02	Bus voltage (V)	0.1V	7002H
L0.03	Output voltage (V)	1V	7003H
L0.04	Output current (A)	0.01A	7004H
L0.05	Output power (kw)	0.1kW	7005H
L0.06	Output torque (%)	0.1%	7006H
L0.07	X input status	1	7007H
L0.08	Y output status	1	7008H
L0.09	AI1 voltage (V)	0.01V	7009H
L0.10	AI2 Voltage (V)/Current (mA)	0.01V/0.01mA	700AH
L0.11	Panel potentiometer voltage (V)	0.01V	700BH
L0.12	Counting value	1	700CH
L0.13	Length value	1	700DH
L0.14	Load speed display	1	700EH
L0.15	PID setting	0.01	700FH
L0.16	PID feedback	0.01	7010H
L0.17	PLC stage	1	7011H
L0.18	PULSE input pulse frequency (Hz)	0.01kHz	7012H
L0.19	Feedback speed (unit 0.1Hz)	0.1Hz	7013H
L0.20	Remaining running time	0.1Min	7014H
L0.21	AI1 pre-correction voltage	0.001V	7015H
L0.22	AI2 Pre-correction Voltage/current (mA)	0.01V/0.01mA	7016H
L0.23	Panel potentiometer pre-correction voltage	0.001V	7017H
L0.24	Linear speed	1m/min	7018H
L0.25	Current power-on time	1min	7019H
L0.26	Current running time	0.1min	701AH
L0.27	PULSE input pulse frequency	1Hz	701BH
L0.28	Communication setting	0.01%	701CH
L0.29	Encoder feedback speed	0.01Hz	701DH
L0.30	Main frequency X display	0.01Hz	701EH

L0.31	Auxiliary frequency Y display	0.01Hz	701FH
L0.32	View arbitrary memory address value	1	7020H
L0.33	Synchronize rotor position	0.1°	7021H
L0.34	Motor temperature value	1℃	7022H
L0.35	Target torque (%)	0.1%	7023H
L0.36	Rotation position	1	7024H
L0.37	Power factor angle	0.1°	7025H
L0.38	ABZ position	1	7026H
L0.39	V/F separation target voltage	1V	7027H
L0.40	V/F separated output voltage	1V	7028H
L0.41	X input state visual display	1	7029H
L0.42	Y input state visual display	1	702AH
L0.43	X functional state visual display 1 (function 01-40)	1	702BH
L0.44	X functional state visual display 2 (function 41-80)	1	702CH
L0.45	Fault information	1	702DH
L0.58	Z signal counter	1	703AH
L0.59	Setting frequency (%)	0.01%	703BH
L0.60	Operating frequency (%)	0.01%	703CH
L0.61	Converter status	1	703DH
L0.62	Current fault code	1	703EH

Chapter VI explanation of parameters

Group F0 Basic function unit

F0.00	GP Type display		Default	1
	Setting range	1	G type (constant torque load)	
		2	P type (fan or pump load etc)	

This parameter is only for the user to set the model., and the user can change this parameter according to the load.

1: Constant torque load for specified rated parameters

2: Variable torque load for specified rated parameters ((fan, pump load)

F0.01	Running command channel selection		Default	0
	Setting range	0	Operating panel command channel	
		1	Terminal command channel	
		2	Communication command channel	

Select the input channel of the converter control command. Converter control commands include: start, stop, forward, reverse, point and so on.

0: Operating panel command channel

Running command is controlled by RUN and STOP/RES buttons on the operation panel.

1: Terminal command channel

Running commands are controlled by multi-functional input terminals such as FWD, REV, JOGF, JOGR, etc.

2: Communication command channel

Running commands are given by upper computer through communication.

For communication-related functional parameters, please refer to the description of "Fd Group Communication Parameters".

F0.02	Main frequency instruction selection		Default	4
	Setting range	0	Digital setting (F0.09 preset frequency, UP/DOWN modifiable, no retentive at power off)	
		1	Digital Setting (preset frequency F0.09, UP/DOWN modifiable, retentive at power off)	
		2	AI1	
		3	AI2	
		4	Panel potentiometer	
		5	Pulse setting (X5)	

		6	Multistage instructions
		7	PLC
		8	PID
		9	Communication given

Select the input channel of the main given frequency of the converter. There are 10 main given frequency channels:

0: Number Settings (Power Down, No Memory)

The initial set frequency is F0.09 "preset frequency" value.

The set frequency value of frequency converter can be changed by_key and_key of keyboard (UP, DOWN of multi- functional input terminal).

When the frequency converter is turned off and powered on again, the set frequency value is restored to F0.09 "Digital Set Preset Frequency" value.

1: Digital Settings (Power Down Memory)

The initial set frequency is F0.09 "preset frequency" value.

The set frequency value of the converter can be changed by the_and_keys of the keyboard (or UP and DOWN of the multi-functional input terminals).

When the converter is powered off and powered on again, the set frequency is the maximum frequency at the last power-off time, which is memorized by keyboard_, _keys or terminal UP, DOWN corrections.

It should be noted that F0.10 is "Digital Set Frequency Stop Memory Selection", and F0.10 is used to select whether the frequency correction is remembered or cleared when the frequency converter stops. F0.10 is related to downtime, not power-off memory. It should be noted in application.

2:AI1 3:AI2 4:Panel potentiometer

The frequency is determined by the analog input terminal. The T600 control board provides two analog input terminals (AI1, AI2) and panel potentiometer.

Among them:

AI1 is either 0V-10V voltage input or 0mA-20mA current input, which is selected by J1 dial switch on the control board.

AI2 can be either 0V-10V voltage input or 0mA-20mA current input, which is selected by J2 dialing switch on the control board.

The input voltage values of AI1, AI2 and panel potentiometer can be selected freely according to the corresponding relationship with the target frequency.

T600 provides five sets of corresponding curves, three of which are linear (2 points corresponding relationship), and two sets of curves are arbitrary curves with 4 points corresponding relationship. Users can set them by F5 and A6 functional codes.

Function code F5.22 is used to set three analog inputs of AI1-AI2 and panel potentiometer. Which of the five groups of curves is selected, and the specific corresponding relations of the five groups of curves are referred to the instructions of F5 and A6 groups of function codes.

5: Pulse given (X5)

Frequency is given by terminal pulse.

Pulse signal specifications: voltage range 9V-30V, frequency range 0kHz-100kHz. Pulse given can only be input from multi-functional input terminal X5.

The relationship between the input pulse frequency of X5 terminal and the corresponding setting is set through F5.17~F5.21. The corresponding relationship is a straight line correspondence of 2 points. The corresponding set of pulse input is 100.0%, which is the percentage of the relative maximum frequency F0.13.

6: Multi-segment instructions

When choosing the operation mode of multi-segment instructions, it is necessary to input different state combinations of X terminals through digital quantities, corresponding to different set frequency values. T600 can set up four multi-segment instruction terminals and 16 states of four terminals. It can correspond to any 16 "multi-segment instructions" through FC group function codes. Multi-segment instructions are the percentage of the relative maximum frequency F0.13.

When the X terminal of digital input is used as the function of multi-segment instruction terminal, it needs to be set up in group F4. For the specific content, please refer to the description of related function parameters of group F4.

7: Simple PLC

When the frequency instructions are simple PLC, the frequency instructions of the converter can be switched between 1 to 16 arbitrary frequency instructions. The retention time of 1 to 16 frequency instructions and their respective acceleration and deceleration time can also be set by users. The specific content refers to the FA group related instructions.

8:PID

The output of process PID control is selected as the operating frequency. Generally, it is used in process closed-loop control, such as constant pressure closed-loop control, constant tension closed-loop control and so on.

When using PID as frequency instruction, F9 group of relevant parameters of "PID function and constant pressure water supply" need to be set.

9: Communication given

Frequency is given by means of communication.

Note: Multi-segment frequency has the highest priority. See the 56, 57, 58 functions of F4.01-F4.07 and the multi-segment frequency setting of F8.01-F8.07.

F0.03	Auxiliary frequency instruction selection		Default	0
	Setting range	0	Digital setting (F0.09 preset frequency, UP/DOWN can be modified, no retentive at power off)	
		1	Digital setting (preset frequency F0.09, UP/DOWN modifiable, retentive at power off)	
		2	AI1	
		3	AI2	
		4	Panel potentiometer	
		5	Pulse setting (X5)	
		6	Multistage instructions	
		7	PLC	
		8	PID	
		9	Communication given	

Auxiliary frequency instruction is the same as the main frequency instruction when it is used as an independent frequency given channel (i.e. the frequency instruction is selected as the main frequency instruction to switch to the auxiliary frequency instruction). The use method can refer to the relevant instructions of F0.02.

When auxiliary frequency instructions are used to superimpose a given frequency (i.e. a combination of the main frequency instructions and auxiliary frequency instructions to achieve a given frequency), attention should be paid to:

1)The preset frequency (F0.09) does not work when the auxiliary frequency instruction is given to the number. The frequency adjustment made by the user through the▲、▼ keys (UP and DOWN of the multi-functional input terminals) of the keyboard directly adjusts on the basis of the main given frequency.

2) When the auxiliary frequency instruction is given by analog input (AI1, AI2, panel potentiometer) or pulse input, the range of 100% of the input set corresponding to the auxiliary frequency instruction can be set by F0.05 and F0.06.

3) When the frequency instruction is given as the pulse input, it is similar to the analog input.

Tip: The auxiliary frequency instruction selection and the main frequency instruction selection can not be set to the same channel, that is, F0.02 and F0.03 should not be set to the same value, otherwise it is easy to cause confusion.

F0.04	Selection of frequency instruction overlay mode		Default	0
	Setting range	Unit's digit	Frequency instruction selection	
		0	Primary frequency instruction	
		1	Principal and auxiliary operation results (operation relations determined by ten bits)	
		2	Switching between main frequency instruction and auxiliary frequency instruction	
		3	Switching between main Frequency Instruction and main and auxiliary operations	
		4	Switching between auxiliary frequency instruction and result of main and auxiliary operations	
		Ten's digit	Principal and auxiliary operational relations of frequency instructions	

		0	Principal + auxiliary
		1	Principal - auxiliary
		2	Maximum of both
		3	Minimum of both

Through this parameter, the frequency of the given channel is selected. The frequency is given by the combination of the main frequency instruction and the auxiliary frequency instructio

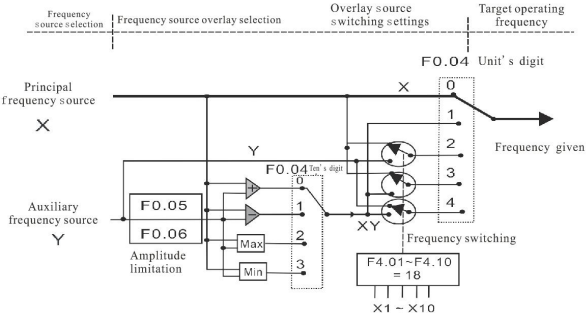

Figure 6-1 Frequency overlay diagram

When the frequency instruction is chosen as the main and auxiliary operation, the offset frequency can be set by F0.08, and the offset frequency can be superimposed on the main and auxiliary operation results to flexibly meet various needs.

F0.05	Selection of auxiliary frequency instruction range in overlay	Default	0
	Setting range	0	Relative to maximum frequency
		1	Relative to the main frequency instruction
F0.06	Range of auxiliary frequency instruction in overlay	Factory default	100%
	Setting range	0%～150%	
F0.08	Auxiliary frequency instruction bias frequency in overlay	Factory default	0.00Hz
	Setting range	0.00Hz～maximum frequency	

The function code is valid only when the frequency instruction is selected as the main and auxiliary operation.

When the frequency instruction is the main and auxiliary operation, F0.08 is the bias frequency, and superimposed with the result of the main and auxiliary operation as the final frequency setting value, which makes the frequency setting more flexible.

F0.09	Digital setting preset frequency	Default	50.00Hz
	Setting range	00.00Hz～maximum frequency	

When the frequency instruction is selected as "digital setting", the function code value is the initial value of the frequency digital setting of the frequency converter.

F0.10	Memory selection of digital setting frequency shutdown		Default	1
	Setting range	0	No memory	
		1	Memory	

This function is only valid when the frequency instruction is set to digital.

"No memory" means that after the frequency converter shutdown, the digital set frequency value is restored to F0.09 (preset frequency), and the frequency correction of keyboard▲ ,▼ key or terminal UP, DOWN is cleared.

"Memory" means that after the frequency converter is down, the digital setting frequency is reserved for the setting frequency of the last downtime, and the frequency correction made by keyboard▲,▼ keys or terminals UP and DOWN remains valid.

F0.11	Frequency instruction resolution		Default	2
	Setting range	1	0.1Hz	
		2	0.01Hz	

This parameter is used to determine the resolution of all frequency-dependent functional codes.

When the frequency resolution is 0.1Hz, the maximum output frequency of T600 can reach 3200Hz (the larger the carrier frequency F0.19 is, the better) at high output frequency, while the frequency resolution is 0.01Hz, the maximum output frequency of T600 is 320.00Hz.

Note: When modifying the functional parameters, the decimal points of all the parameters related to frequency will change, and the corresponding frequency values will also change. Special attention should be paid to the use of these parameters. The parameter value restored to factory value (F0.50 = 1) does not restore, but the parameter restored to factory value (F0.50 = 3) will restore to 2.

F0.12	Runtime frequency instruction UP/DOWN benchmark		Default	0
	Setting range	0	Operating frequency	
		1	Setting frequency	

This parameter is valid only if the frequency instruction is digitally set.

To determine the keyboard▲ , ▼keys or terminal UP/DOWN action, how to correct the set frequency, that is, whether the target frequency is increased or decreased on the basis of the set frequency or on the basis of the set frequency.

The difference between the two settings is obvious when the frequency converter is in the process of acceleration and deceleration, that is, if the frequency of the frequency converter is different from the set frequency, the different choice of the parameters is very different.

F0.13	Maximum frequency	Default	50.00Hz
	Setting range	50.00Hz～320.00Hz	

The analog input, pulse input (X5) and multi-segment instruction in T510 are all relative to F0.13 calibration when they are used as frequency instructions.

The maximum output frequency of T510 can reach 3200 Hz. In order to take into account the resolution of frequency instruction and the range of frequency input, the decimal number of frequency instruction can be selected by F0.11.

When F0.11 is chosen as 1, the frequency resolution is 0.1Hz, and F0.13 is set in the range of 50.0Hz to 3200.0Hz. When F0.11 is chosen as 2, the frequency resolution is 0.01Hz, and F0.13 is set in the range of 50.00Hz to 320.00Hz.

Note: Modifying F0.11 will change the frequency resolution of all frequency-related functional parameters.

F0.14	Upper limit frequency	Default	50.00Hz
	Setting range	Lower limit frequency F0.17~maximum frequency F0.13	

Set the upper limit frequency and set the range F0.17-F0.13.

F0.15	Upper frequency instruction		Default	0
	Setting range	0	F0.14 setting	
		1	AI1	
		2	AI2	
		3	Panel potentiometer	
		4	PULSE setting(X5)	
		5	Communication setting	

Define the source of the upper limit frequency. The upper limit frequency can come from digital setting (F0.14), analog input, PULSE setting or communication setting.

When using analog AI1, AI2, panel potentiometer settings, PULSE settings (X5) or communication settings, similar to the main frequency instructions, see F0.02.

For example, when the winding control field adopts the torque control mode, in order to avoid the phenomenon of "flying car" when the material is broken, the upper limit frequency can be set by analog quantity. When the frequency converter runs to the upper limit frequency value, the frequency converter keeps running at the upper limit frequency.

F0.16	Upper limit frequency offset	Default	0.00Hz
	Setting range	0.00Hz～maximum frequency	

When the upper limit frequency is set by analog or PULSE, F0.16 is taken as the offset of the set value, and the offset frequency is superimposed with the upper limit frequency of F0.15 as the set value of the final upper limit frequency.

F0.17	Lower limit frequency	Default	0.00Hz
	Setting range	0.00Hz～upper limit frequency	

When the frequency instruction is lower than the lower limit frequency set by F0.17, the converter can shut down, run at the lower limit frequency or run at zero speed. What mode of operation can be set by F0.18 (set frequency is lower than the lower limit frequency mode).

F0.18	Operation mode of set frequency below lower limit frequency		Default	0
	Setting range	0	Running at the lower frequency limit	
		1	Shut down	
		2	Zero-speed operation (blocking output in V/F mode)	

When the set frequency is lower than the lower limit frequency, the operation state of the converter can be selected by this parameter. T600 provides three operation modes to meet various application requirements.

When the frequency instruction is PID valid, F0.18 fails, always according to F0.18=0. When the set frequency is less than the lower limit frequency, the lower limit frequency can be operated. Energy saving can be achieved by setting F9 parameters sleep recovery parameters.

F0.19	Carrier frequency	Default	Related to the model
	Setting range	0.5kHz～16.0kHz	

This function adjusts the carrier frequency of the converter. By adjusting the carrier frequency, the motor noise can be reduced, the resonance point of the mechanical system can be avoided, the leakage current of the line can be reduced, and the interference of the frequency converter can be reduced.

Note: When the set frequency exceeds 400 Hz, the carrier frequency should be set larger, F0.19 = 8.0 KHz at 600 Hz, F0.19 = 10.0 KHz at 800 Hz and F0.19 = 12.0 KHz at 1000 Hz.

F0.20	Carrier frequency adjustment with temperature	Default	0
	Setting range	0: No 1:Yes	

Carrier frequency adjusting with temperature refers to the frequency converter automatically reduces the carrier frequency when it detects the higher temperature of its radiator, so as to reduce the temperature rise of the frequency converter. When the radiator temperature is low, the carrier frequency gradually restores to the set value. This function can reduce the chance of frequency converter overheating alarm.

F0.21	Acceleration time 1	Default	Type dependant
	Setting range	0.00s～650.00s（F0.23=2） 0.0s～6500.0s（F0.23=1） 0s～65000s（F0.23=0）	
F0.22	Deceleration time 1	Default	Type dependant
	Setting range	0.00s～650.00s（F0.23=2） 0.0s～6500.0s（F0.23=1） 0s～65000s（F0.23=0）	

Acceleration time refers to the time required for the converter to accelerate from zero frequency to reference frequency of acceleration and deceleration (F0.24 determined), as shown in T1 in Figure 6-2.

The deceleration time refers to the time required for the frequency converter to decelerate from the reference frequency of acceleration and deceleration (F0.24), to zero frequency. See T2 in Figure 6-2.

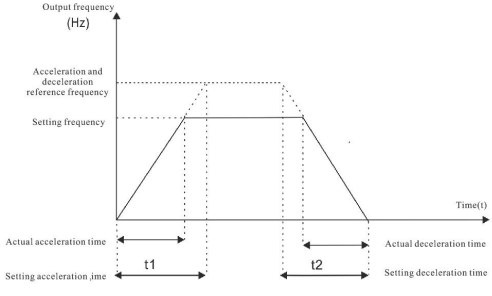

Figure 6-2 Acceleration and deceleration time illustration

T510 provides four sets of acceleration and deceleration time. Users can use digital input terminal X to switch and choose. The time is set by the following function codes

Group 1: F0.21, F0.22;

Group 2: F8.16, F8.17;

Group 3: F8.18, F8.19;

Group 4: F8.20 and F8.21.

F0.23	Acceleration and deceleration time unit		Default	1
	Setting range	0	1Second	
		1	0.1Second	
		2	0.01Second	

To meet the needs of all kinds of sites, T600 provides three acceleration and deceleration time units, 1 second, 0.1 second and 0.01 second, respectively.

Note: When modifying the function parameters, the decimal points displayed by the four groups of acceleration and deceleration time will change, and the corresponding acceleration and deceleration time will also change. Special attention should be paid to the application process.

F0.24	Acceleration and deceleration reference frequency		Default	0
	Setting range	0	Maximum frequency	
		1	Setting frequency	
		2	100Hz	

Acceleration and deceleration time refers to the acceleration and deceleration time between zero frequency and the set frequency of F0.24.

When F0.24 is chosen as 1, the acceleration and deceleration time is related to the set frequency. If the set frequency changes frequently, the acceleration of the motor will change, which should be paid attention to in application.

F0.25	Acceleration and deceleration mode		Default	0
	Setting range	0	Linear acceleration and deceleration	
		1	S-curve acceleration and deceleration A	
		2	S-curve acceleration and deceleration B	

Choose the mode of frequency change during start-up and stop operation of frequency converter.

0: linear acceleration and deceleration

The output frequency increases or decreases in a straight line. T600 provides four acceleration and deceleration times. It can be selected by multi-function digital input terminals (F4.01-F4.10).

1:S curve acceleration and deceleration A

The output frequency increases or decreases according to S curve. S curve is used in places requiring gentle start or shutdown, such as elevators, conveyor belts, etc. As shown in Figure 6-3. Function codes F0.26 and F0.27 define the time ratio of the start and end of S-curve acceleration and deceleration respectively.

2:S curve acceleration and deceleration B

In this S-curve acceleration and deceleration B, motor rated frequency FB is always the inflection point of S-curve. As shown in figure 6-04. Usually used in high-speed areas above rated frequency where rapid acceleration and deceleration are required.

When the set frequency is above the rated frequency, the acceleration and deceleration time is:

$$t=\left(\frac{4}{9}\times\left(\frac{f}{f_b}\right)^2+\frac{5}{9}\right)$$

Among them, F is the set frequency, Fb is the rated frequency of the motor, and T is the time from zero frequency to the rated frequency Fb.

F0.26	Proportion of S curve starting time	Default	30.0%
	Setting range	0.0%～（100.0%-F0.27）	
F0.27	Proportion of S curve end time	Default	30.0%
	Setting range	0.0%～（100.0%-F0.26）	

Function codes F0.26 and F0.27 are defined respectively. The ratio of the start and end time of S curve acceleration and deceleration A should be satisfied by two function codes: F0.26 + F0.27 ≤100.0%.

In Fig. 6-03, T1 is the parameter defined by parameter F0.26, and the slope of output frequency changes gradually increases during this period. T2 is the time defined by parameter F0.27, during which the slope of output frequency change gradually changes to 0. In the time

between t1 and t2, the slope of output frequency change is fixed, that is, linear acceleration and deceleration are carried out in this interval.

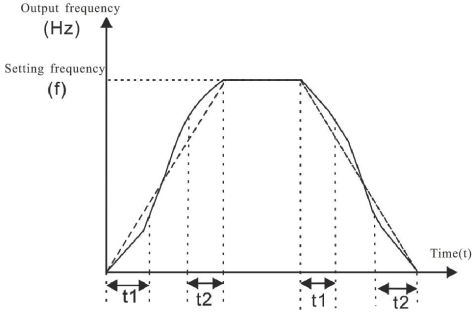

Fig. 6-3, S curve acceleration and deceleration A illustration

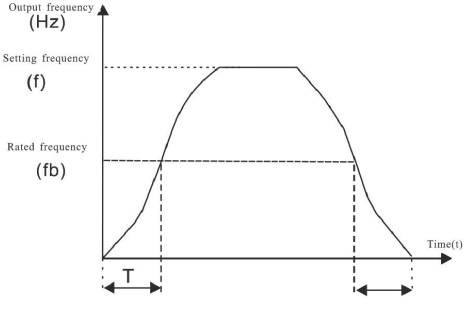

Fig. 6-4, S curve acceleration and deceleration B illustration

F0.28	JOG frequency	Default	6.00Hz
	Setting range	0.00Hz～maximum frequency	
F0.29	JOG acceleration time	Default	20.0s
	Setting range	0.0s～6500.0s	
F0.30	JOG deceleration time	Default	20.0s
	Setting range	0.0s～6500.0s	

Define the given frequency and acceleration and deceleration time of the point-moving time-frequency converter.

When starting, the starting mode is fixed as direct starting mode (F6.00 = 0), and the stopping mode is fixed as deceleration stopping mode (F6.07 = 0).

F0.31	Terminal JOG priority	Default	1
	Setting range	0: Invalid 1: Valid	

This parameter is used to set whether the terminal point function has the highest priority. When the terminal point priority is valid, if the terminal point command appears in the operation process, the converter will switch to the terminal point operation state.

F0.32	Direction of operation		Default	0
	Setting range	0	Consistent with the set direction	
		1	Contrary to the set direction	

By changing the function code, the purpose of changing the motor steering can be achieved without changing the connection of the motor. Its function is equivalent to adjusting any two lines of the motor (U, V, W) to realize the conversion of the motor rotation direction.

Note: After parameter initialization, the direction of the motor will return to its original state. It is strictly forbidden to change motor steering after system debugging.

F0.33	Anti-inversion control		Default	0
	Setting range	0	Allow motor reversal	
		1	No motor inversion	

Through this parameter, whether the frequency converter is allowed to operate in the inverted state is set. In the case of motor inversion is not allowed,to set F0.33=1.

F0.34	Functional parameter mode to display attributes		Default	01
	Setting range	Unit's digit	Group L display selection	

		0	No display
		1	Display
		Ten's digit	Group A display selection
		0	No display
		1	Display
F0.35	Individuality parameter mode display selection	Default	00
	Setting range	Unit's digit	User-customized parameter display selection
		0	No display
		1	Display
		Ten's digit	User change parameter display selection
		0	No display
		1	Display

The establishment of parameter display mode is mainly to facilitate users to view the functional parameters of different arrangement forms according to actual needs, and provide three kinds of parameter display mode.

Name	Description
Functional parameter mode FunC	Functional parameters of frequency converter are displayed sequentially. There are F0-Fd, A0-A7 and L0 functional parameters groups respectively.
User-customized parameter mode USEr	Individual functional parameters (up to 32 customized) are customized for display. Users determine the functional parameters to be displayed by group FE.
User change parametric mode CHAn	Functional parameters inconsistent with factory parameters

T510 converter provides two groups of personality parameters display mode: user customized parameter mode and user changed parameter mode. Press QUICK key to switch the display mode of three parameters.

User-customized parameter group sets parameters to group FE for users. The maximum number of parameters can be 32. These parameters can be aggregated to facilitate customer debugging.

In the user-customized parameter mode, a symbol u is added by default before the user-customized function code.

For example: F1.00, in the user customized parameter mode, the display effect is uF1.00 for the user to change the parameter mode.

For users to change the parameters which are different from the manufacturer's factory value. User change parameter group is helpful for customers to see the summary of the changed parameters and to find problems on the spot.

F0.36	User password User password	Default	0
	Setting range	0～65535	

If F0.36 sets any non-zero number, the password protection function will take effect. Next time you enter the menu, you must enter the password correctly. Otherwise, you can't view and modify the function parameters. Please remember the user password you set.

If F0.36 is set to 00000, the set user password will be cleared and the password protection function will be invalid.

F0.37	Parameter protection setting	Default	0
	Setting range	0～1	

Users set whether the function code parameters can be modified to prevent the danger of the function parameters being changed by mistake.

When the function code is set to "0", all the function codes can be modified; when the function code is set to "1", all the function codes can only be viewed and can not be modified.

F0.38	Start protection selection		Default	0
	Setting range	0	No protection	
		1	Protection	

This parameter relates to the safety protection function of the frequency converter.

If the parameter is set to "1", if the operation command of the converter is valid at the time of power-on (For example, the terminal operation command is closed before power-on), then the converter does not respond to the operation command, it must first remove the operation command once, and the operation command is valid again before the converter responds.

In addition, if the parameter is set to "1", if the operation command is valid at the time of failure reset and the frequency converter does not respond to the operation command, the operation command must be removed before the operation protection state can be eliminated. Setting this parameter as "1" can prevent the danger caused by the motor responding to the operation order when power on or fault reset occurs without knowing it.

F0.39	Undervoltage point setting	Default	100.0%
	Setting range	75.0%～140.0%	

For setting the voltage value of E009 under-voltage fault of frequency converter, the reference point of under-voltage of frequency converter with different voltage levels (100.0%) corresponds to different voltages, respectively:

Voltage grade	Undervoltage point base value (DC Bus)
Single phase 220V	180V
Three phase 220V	180V
Three phase 380V	350V

F0.40	Functional selection of MF.K key		Default	3
	Setting range	0	The MF.K key invalid	
		1	Switching between command channel of operation panel and remote command channel (terminal command channel or communication command channel)	
		2	Forward and reverse switching	
		3	Forward JOG	
		4	Reverse JOG	
		5	Reverse operation	

The MF.K key is a multi-functional key, through which the function of the MF.K key can be set. This key can be used in both downtime and operation.

0: This key has no function.

1: Keyboard command and remote operation switching.

The switch of command source refers to the switch between the current command source (external terminal control or communication control) and keyboard control (local operation). If the current command source is keyboard control, the key function is invalid.

2: Forward and reverse switching

Switch the direction of the frequency instruction through the MF.K key. This function is only valid when the command source is the command channel of the operation panel.

3: Forward JOG

Forward turning point (FJOG) is realized by keyboard MF.K key.

4: Reverse JOG

Reverse JOG (RJOG) is realized by keyboard MF.K key.

5: Reverse operation

The key MF.K is used to realize the reverse operation.

F0.41	STOP /RESET Key function		Default	1
	Setting range	0	Only in keyboard mode ,STOP/RES key downtime effective	
		1	In any operation mode ,STOP/RES key downtime function effective	
F0.42	Motor selection		Default	0
	Setting range	0	Motor 1	
		1	Motor 2	

T510 supports the application of time-sharing drive of two motors with frequency converter. Two motors can set motor nameplate parameters, self-learning of independent parameters, selecting different control modes and setting parameters related to operation performance independently.

The first pair of functional parameters of motor parameter group is F1 group and F2 group, and the second pair of motor parameter group corresponds to A0 group of functional parameters.

Users can select the current motor parameter set by function code F0.42, or they can switch the motor parameters by digital input terminal X.

When the choice of function code is contradictory to the choice of terminal, the choice of terminal is the criterion.

F0.49	Applying macro instructions	Default	0
	Setting range	0~65535	0

		2000: Constant pressure water supply application macro (without sleep) 2010: Constant pressure water supply application macro (with sleep) 2668: Application macro of engraving machine	

When using macro instructions, the factory value of F0.50 = 1 or 3 is restored first, and then F0.49 is set as the corresponding application macro instructions.

F0.50	Parameter initialization		Default	0
	Setting range	0	No operation	
		1	Restore factory parameters, excluding motor parameters, F0.11	
		2	Clear record information	
		3	Restore all factory parameters, including motor parameters	
		6	Back up the user's current parameters	
		888	Restore the user’s current parameters	

1. Restore the factory setting value, excluding motor parameters

After setting F0.50 to 1, most of the functional parameters of the converter are restored to factory parameters, but the motor parameters, frequency instruction decimal point (F0.11), fault recording information, cumulative running time (F7.27), cumulative power-on time (F7.28), cumulative power consumption (F7.31) are not restored.

2. Clearing record information

Clear the fault record information of frequency converter.

3. Restore the factory setting value, including motor parameters

6. Backup user's current parameters

Back up the parameters set by the current user. Back up the settings of all current functional parameters. In order to facilitate customer recovery after parameter adjustment disorder.

888. Restore user backup parameters

The user parameters backed up before recovery, that is, the backup parameters backed up by setting F0.50 to "6".

F1 First motor parameters

F1.00	First motor control mode		Default	2
	Setting range	0	Sensorless vector control (SVC)	
		1	Reserved	
		2	V/F control	

0: Sensorless vector control (SVC)

Open-loop vector control, suitable for high-performance control occasions, a frequency converter can only drive a motor. Such as machine tools, centrifuges, wire drawing machines, injection moulding machines and other loads.

1: Closed-loop vector control (FVC) must be equipped with corresponding PG card and coder

2:V/F Control

It is suitable for the occasion where the load requirement is not high or a frequency converter drives multiple motors, such as fan and pump loads. It can be used in the occasion where one frequency converter drives multiple motors.

Tip: When choosing vector control mode, it is necessary to identify the parameters of the over-motor. Only accurate motor parameters can give full play to the advantages of vector control. By adjusting the parameters of speed regulator F2 set of functional codes, better performance can be obtained.

F1.01	Selection of motor types		default	0
	Setting range	0	Common asynchronous motor	
		1	Frequency conversion asynchronous motor	
F1.02	Rated power of motor		default	Type dependant
	Setting range		0.1kw～1000.0kw	
F1.03	Rated voltage of motor		Default	Type dependant
	Setting range		1V～2000V	
F1.04	Rated current of motor		Default	Type dependant
	Setting range		0.01A~655.35A (power ≦ 55kw) 0.1A-6553.5A (power > 55kw)	
F1.05	Rated frequency of motor		Default	Type dependant
	Setting range		0.01Hz～maximum frequency	
F1.06	Rated speed of motor		Default	Type dependant

	Setting range	1rpm～65535rpm

The above function codes are motor nameplate parameters. Whether VF control or vector control is used, the relevant parameters should be set accurately according to motor nameplate.

In order to obtain better VF or vector control performance, motor parameters need to be self-learning, and the accuracy of the adjustment results is closely related to the correct setting of motor nameplate parameters.

F1.07	Stator resistance of asynchronous motor	Default	Type dependant
	Setting range	0.001Ω～65.535Ω（power ≦55kw） 0.0001Ω～6.5535Ω（power >55kw）	
F1.08	Rotor resistance of asynchronous motor	Default	Type dependant
	Setting range	001Ω～65.535Ω（power ≦55kW） 0.0001Ω～6.5535Ω（power >55kW）	
F1.09	Leakage inductance of asynchronous motor	Default	Type dependant
	Setting range	0.01mH～655.35mH（power≦55kW） 0.001mH～65.535mH（power>55kW）	
F1.10	Mutual inductance reactance of asynchronous motor	Default	Type dependant
	Setting range	0.1mH～6553.5mH（power≦55kw） 0.01mH～655.35mH（power>55kw）	
F1.11	No-load current of asynchronous motor	Default	Type dependant
	Setting range	Set 0.01A-F1.04 (power ≦ 55kw) 0.1A-F1.04 (power > 55kw) range	

F1.07-F1.11 are the parameters of asynchronous motor. These parameters are not commonly found on the nameplate of motor. They need to be acquired by self-learning of frequency converter. Among them, "static self-learning of asynchronous motor" can only obtain three parameters of F1.07-F1.09, while "complete self-learning of asynchronous motor" can obtain all five parameters here, as well as encoder phase sequence and current loop PI parameters. When the motor rated power (F1.02) or motor rated voltage (F1.03) is changed, the frequency converter will automatically modify the parameters of F1.07-F1.11 and restore the five parameters to the commonly used standard Y series motor parameters.

If the asynchronous motor can not be self-learning in the field, according to the parameters provided by the motor manufacturer, the corresponding function codes can be input.

F1.28	Encoder line number	Default	2500
	Setting range	1～65535	

Set the number of pulses per revolution for ABZ or UVW incremental encoder.

In the vector control mode with speed sensor, the number of encoder pulses must be set correctly, otherwise the motor will run abnormally.

F1.29	Encoder type		Default	0
	Setting range	0	ABZ incremental encoder	
		1	UVW incremental encoder	
		2	Resolver	
		3	Sine-cosine encoder	
		4	UVW encoder	

T510 supports a variety of encoder types, different encoders need to choose different PG cards, when using, please choose the correct PG card.

In general, the asynchronous motor only uses ABZ incremental encoder and resolver.

After installing the PG card, the F1.28 should be set correctly according to the actual situation, otherwise the converter may run abnormally.

F1.31	AB phase sequence of ABZ incremental encoder		Default	0
	Setting range	0	Forward	
		1	Reverse	

The function code is only valid for ABZ incremental encoder, that is, only when F1.28=0. It is used to set the phase sequence of AB signal of ABZ incremental encoder.

The function code is effective for asynchronous motor. ABZ encoder AB phase sequence can be obtained when asynchronous motor is self-learning dynamically.

F1.38	Motor parameters self-learning		Default	0
	Setting range	0	No operation	
		1	Asynchronous motor static self-learning	
		2	Asynchronous motor complete self-learning	

0: No operation, that is, no self-learning.

1: Asynchronous motor static self-learning, suitable for asynchronous motor and load is not easy to get off, but can not complete self-learning occasions. Before static self-learning of asynchronous machine, motor type and motor nameplate parameters F1.01-F1.06 must be set correctly. Asynchronous machine static self-learning, frequency converter can obtain F1.07-F1.09 three parameters.

Action description: Set the function code to 1, then press RUN key, the converter will be static self-learning.

2: Complete self-learning of asynchronous motor

In order to ensure the dynamic control performance of the frequency converter, please choose complete self-learning. At this time, the motor must be disconnected from the load to keep the motor in no-load state.

In the complete self-learning process, the frequency converter first carries on the static self-learning, then accelerates to 80% of the rated frequency of the motor according to the acceleration time F0.21. After holding for a period of time, the speed reducer stops according to the deceleration time F0.22 and ends the self-learning.

Before complete self-learning of asynchronous machine, it is necessary to set motor type and motor nameplate parameters F1.01-F1.06.

The asynchronous motor is fully self-learning. The frequency converter can obtain five motor parameters of F1.07-F1.11, and the PI parameters of the current loop of vector control F2.13-F2.16.

Action description: Set the function code to 2, then press RUN key, the converter will complete self-learning.

Description: Self-learning can only be carried out in keyboard operation mode, and motor self-learning can not be carried out in terminal operation and communication operation mode.

F2 First motor speed control parameter set

F2.00	Velocity loop proportional gain 1	Default	30
	Setting range	1～100	

F2.01	Velocity loop integral time 1	Default	0.50s
	Setting range	0.01s～10.00s	
F2.02	Switch frequency 1	Default	5.00Hz
	Setting range	0.00～F2.05	
F2.03	Velocity loop proportional gain 2	Default	15
	Setting range	0～100	
F2.04	Velocity loop integral time 2	Default	1.00s
	Setting range	0.01s～10.00s	
F2.05	Switch frequency 2	Default	10.00Hz
	Setting range	F2.02～maximum output frequency	

When the frequency converter runs at different frequencies, different PI parameters of the speed loop can be selected. When the operating frequency is less than the switching frequency 1 (F2.02), the PI adjusting parameters of the speed loop are F2.00 and F2.01. When the operating frequency is larger than the switching frequency 2, the PI adjustment parameters of the speed loop are F2.03 and F2.04. The PI parameters of speed loop between switching frequency 1 and switching frequency 2 are switched linearly for two groups of PI parameters, as shown in Fig. 6-5:

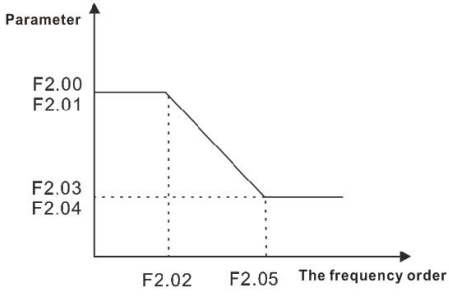

Figure 6-5 PI parameter schematic diagram

The speed dynamic response characteristics of vector control can be adjusted by setting the ratio coefficient and integration time of the speed regulator.

Increasing the proportional gain and reducing the integration time can accelerate the dynamic response of the speed loop. However, too large proportional gain or too small integration time may cause oscillation of the system. The suggested adjustment methods are as follows:

If the factory parameters can not meet the requirements, fine-tuning is carried out on the basis of the factory value parameters. First, the proportional gain is increased to ensure that the system does not oscillate, and then the integration time is reduced, so that the system has faster response characteristics and smaller overshoot.

Note: If the PI parameters are not set properly, it may lead to excessive speed overshoot. Even overvoltage fault occurs when overshoot falls back.

F2.06	Vector control slip gain	Default	100%
	Setting range	50%～200%	

For speed sensorless vector control, this parameter is used to adjust the steady speed accuracy of the motor: when the motor is loaded with low speed, it increases the parameter, and vice versa.

F2.07	Time constant of speed loop filtering	Default	0.000s
	Setting range	0.000s～0.100s	

In the vector control mode, the output of the speed loop regulator is the moment current instruction, which is used to filter the moment instruction. Generally, this parameter does not need to be adjusted. When the speed fluctuation is large, the filtering time can be increased appropriately. If the motor oscillates, the parameter should be reduced appropriately.

The filter time constant of speed loop is small, and the output torque of frequency converter may fluctuate greatly, but the response of speed is fast.

F2.08	Vector control overexcitation gain	Default	64
	Setting range	0～200	

During the deceleration process of frequency converter, over-excitation control can restrain bus voltage rise and avoid over-voltage fault. The greater the over-excitation gain, the stronger the suppression effect.

In the case of over-voltage alarm during the deceleration process of frequency converter, it is necessary to improve the over-excitation gain. However, over-excitation gain is too large, which can easily lead to the increase of output current, so it needs to be weighed in application.

When the inertia is very small, there will be no voltage rise in the motor deceleration, it is recommended to set the over-excitation gain to 0; for the case of braking resistance, it is also recommended to set the over-excitation gain to 0.

F2.09	Torque upper limit source in speed control mode		Default	0
	Setting range	0	F2.10	
		1	AI1	
		2	AI2	
		3	Panel potentiometer	
		4	PULSE setting	
		5	Communication setting	
F2.10	Digital setting of torque upper limit in speed control mode		Default	150.0%
	Setting range		0.0%～200.0%	

In the speed control mode, the maximum output torque of the converter is controlled by the torque upper limit source.

F2.09 is used to select the setting source of the upper limit of the torque. When setting through analog, PULSE pulse and communication, the corresponding set of 100% corresponds to F2.10, while the F2.10 of 100% is the rated torque of the converter.

AI1, AI2, panel potentiometer settings can be seen in F5 group of AI curve related introduction (through F5.22 to select their respective curves).

PULSE pulses are described in F5.17-F5.21.

When choosing the communication setting, if the current point-to-point communication slave and the received data are given as the torque, the digital setting of the torque will be sent directly from the host. See Group Fd point-to-point communication introduction. Otherwise, the upper computer writes - 100.00%-100.00% data through the communication address of 0 *1000, of which 100.00% corresponds to F2.10.

F2.23	Selection of speed/torque control mode		Default	0
	Setting range	0	Speed control	
		1	Torque control	

Used to select the control mode of frequency converter: speed control or torque control.

T510 multi-functional digital X terminal has two functions related to torque control: Torque control prohibition (function 29), Speed control/Torque control switching (function 46). The two terminals should be used in conjunction with F2.23 to realize the switching of speed and torque control.

When the speed control/torque control switching terminal is invalid, the control mode is determined by F2.23. If the speed control/torque control switching is effective, the control mode is equivalent to the inverse value of F2.23.

In any case, when the torque control forbidden terminal

F2.24	Selection of torque setting source under torque control mode		Default	0
	Setting range	0	Digital setting （F2.26）	
		1	AI1	
		2	AI2	
		3	Panel potentiometer	
		4	PULSE Pulse (X5)	
		5	Communication given	
		6	MIN（AI1，AI2）	
		7	MAX（AI1，AI2）	
F2.26	Torque digital setting in torque control mode		Default	150.0%
	Setting range		-200.0%～200.0%	

F2.24 is used to select the torque setting source. There are 8 modes of torque setting.

Torque setting adopts relative value, 100.0% of which corresponds to the rated torque of the converter. The setting range is - 200.0%-200.0%. It shows that the maximum torque of the converter is 2 times the rated torque of the converter.

When the torque is set to be positive, the frequency converter runs forward.

When the torque is given to be negative, the frequency converter runs in reverse.

The torque settings are described as follows:

0: Digital setting (F2.26)

Target torque direct use F2.26 settings

1:AI1

2:AI2

3: Panel potentiometer

The target torque is determined by the analog input terminal. The T600 control board provides two analog input terminals (AI1, AI2) and panel potentiometer.

AI1 is either 0V-10V voltage input or 0mA-20mA current input. It is selected by J1 jumper on the control board.

AI2 can be either 0V-10V voltage input or 0mA-20mA current input, which is selected by J2 jumper on the control board.

AI1, AI2, panel potentiometer input voltage value, and the corresponding relationship curve with the target torque, users can choose freely through F5.22.

T600 provides five sets of correspondence curves, three of which are linear (2 points correspondence) and two of which are arbitrary curves with 4 points correspondence. Users can set them by F5.01-F5.22 and A6.00-A6.29 functional codes.

Function code F5.22 is used to set three analog inputs of AI1-AI2 and panel potentiometer, which of the five groups of curves is selected respectively.

When the frequency of AI is given, the input of voltage and current corresponds to the set of 100.0%, which is the percentage of F2.26 set by the relative torque number.

4:PULSE pulse (X5)

Target torque is given by terminal X5 high-speed pulse.

Pulse signal specifications: voltage range 9V-30V, frequency range 0kHz-100kHz. Pulse setting can only be input from multi-functional input terminal X5

The relationship between the input pulse frequency of X5 terminal and the corresponding setting is set by F5.17-F5.20. The corresponding relationship is a straight line correspondence of 2 points. The corresponding set of pulse input is 100.0%, which is the percentage of the relative torque figure F2.26.

5: Communication given

Target torque given by communication mode

F2.28	Maximum forward frequency of torque control	Default	50.00Hz
	Setting range	0.00Hz～maximum frequency	
F2.29	Maximum reverse frequency of torque control	Default	50.00Hz
	Setting range	00Hz～maximum frequency	

It is used to set the maximum forward or reverse operating frequency of the converter under the torque control mode.

When the converter torque control, if the load torque is less than the motor output torque, the motor speed will continue to rise. In order to prevent the mechanical system from accidents such as flying cars, it is necessary to limit the maximum speed of the motor in the torque control.

If it is necessary to change the maximum frequency of the torque control dynamically and continuously, it can be achieved by controlling the upper frequency.

F2.30	Torque control acceleration time	Default	0.00s
	Setting range	0.00s～65000s	

F2.31	Torque control deceleration time	Default	0.00s
	Setting range	0.00s～65000s	

Under the torque control mode, the difference between the output torque and the load torque determines the speed change rate of the motor and the load. Therefore, the speed of the motor may change rapidly, resulting in noise or excessive mechanical stress. By setting the

acceleration and deceleration time of the torque control, the speed of the motor can be changed smoothly.

But in the case of requiring quick response of torque, the acceleration and deceleration time of torque control should be set to 0.00s.

For example, two motors are hard-connected to drive the same load. In order to ensure uniform load distribution, one frequency converter is set as the main machine, which adopts speed control mode, the other frequency converter is slave machine and adopts torque control. The actual output torque of the main machine is used as the slave machine's torque instruction. At this time, the slave machine's torque needs to follow the main machine quickly. Then the slave machine's torque control acceleration and deceleration time is 0.00s.

Group F3 VF control parameters

F3.00	V/F curve setting		Default	0
	Setting range	0	Linear V/F	
		1	Multi point V/F	
		2	Square V/F	
		3	1.2 power V/F	
		4	1.4 power V/F	
		6	1.6 power V/F	
		8	1.8 power V/F	
		9	Reserved	
		10	V/F complete separation mode	
		11	V/F semi-separation mode	

0: Linear V/F. suitable for ordinary constant torque load.

1: Multi-point V/F. suitable for special loads such as dehydrator and centrifuge. By setting F3.03-F3.08 parameters, any VF curve can be obtained.

2: Square V/F. suitable for centrifugal loads such as fans and pumps.

3-8: V/F curve between straight line V/F and square V/F.

10:V/F complete separation mode. At this time, the output frequency of the converter is independent of the output voltage, the output frequency is determined by the frequency instruction, and the output voltage is determined by F3.14 (V/F separated voltage source).

V/F complete separation mode is generally used in induction heating, inverter power supply, torque motor control and other occasions.

11:V/F semi-separation mode.

In this case, V and F are proportional, but the proportional relationship can be set by voltage source F3.13, and the relationship between V and F is also related to the rated voltage and frequency of the motor of F1 unit.

Assuming that the input voltage source is X (the value of X is 0-100%), the relationship between the output voltage V and the frequency F of the converter is as follows:

F3.01	Torque lifting	Default	Type dependant
	Setting range	0.0%～30%	
F3.02	Torque lifting cut-off frequency	Default	50.00Hz
	Setting range	0.00Hz～maximum output frequency	

V/F = 2*X* (motor rated voltage)/(motor rated frequency)

In order to compensate the low-frequency torque characteristic of V/F control, the output voltage of low-frequency time-frequency converter is compensated by some lifting. But the setting of the torque lifting is too large, the motor is easy to overheat, and the frequency converter is easy to overflow.

When the load is heavy and the starting moment of the motor is not enough, it is suggested to increase this parameter. Torque lifting can be reduced when the load is light.

When the torque lifting is set to 0.0, the converter is an automatic torque lifting. At this time, the converter automatically calculates the required torque lifting value according to the stator resistance and other parameters of the motor.

Torque lifting torque cut-off frequency: Torque lifting torque is effective under this frequency. Torque lifting failure will occur when the set frequency is exceeded, as illustrated in Figure 6-6.

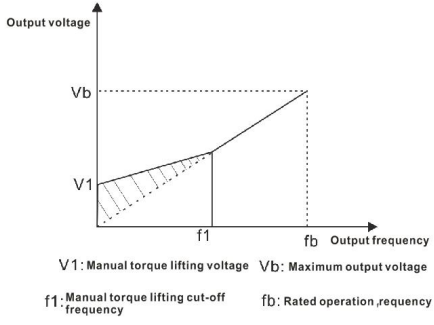

Figure 6-6 VF Curve Torque Lifting

F3.03	Multi point VF frequency point 3	Default	40.00Hz
	Setting range	F3.05~ motor rated frequency (F1.05) Note: The second motor rated frequency is A0.04	
F3.04	Multi point V/F voltage point 3	Default	80.0%
	Setting range	0.0%～100.0%	
F3.05	Multi point V/F frequency point 2	Default	20.00Hz
	Setting range	F6.03～F6.07	
F3.06	Multi point V/F voltage point 2	Default	40.0%
	Setting range	0.0%～100.0%	
F3.07	Multi point V/F frequency point 1	Default	10.00Hz
	Setting range	0.00Hz～F3.05	
F3.08	Multi point V/F voltage point 1	Default	20.0%
	Setting range	0.0%～100.0%	

F3.03-F3.08,Six parameters define multi-segment V/F curves.

The multi point V/F curve should be set according to the load characteristics of the motor. It should be noted that the relationship between three voltage points and frequency points must

be satisfied: V1 < V2 < V3, F1 < F2 < F3. Fig. 6-7 is a set-up diagram of multi point V/F curve.

Excessive voltage setting at low frequencies may cause motor overheating or even burnout, and the frequency converter may be over-speed or over-current protection.

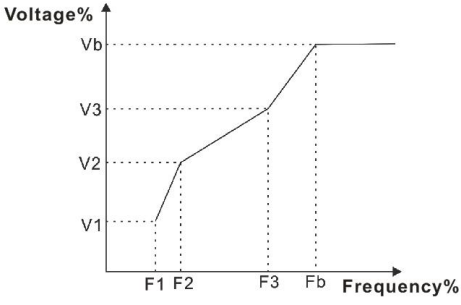

Figure 6-7 Multipoint V/F Curve Setting Diagram

V1-V3: Voltage percentage of multistage velocity V/F sections 1-3

F1-F3: Frequency percentage of multistage velocity V/F band 1-3

Vb: Motor rated voltage Fb: Motor rated operating frequency

F3.09	V/F slip compensation gain	Default	0.0%
	Setting range	0%～200.0%	

This parameter is only valid for induction motors.

VF slip compensation can compensate the motor speed deviation when the load increases, so that the motor speed can be basically stable when the load changes.

VF slip compensation gain is set to 100.0%, which means that the compensation slip with rated load is rated slip of motor, while rated slip of motor is calculated by frequency converter through rated frequency and rated speed of F1 motor.

When adjusting VF slip compensation gain, the principle is that the motor speed is basically the same as the target speed under rated load. When the motor speed is different from the target value, the gain needs to be adjusted appropriately.

F3.10	V/F overexcitation gain	Default	64
	Setting range	0～200	

During the deceleration process of frequency converter, over-excitation control can restrain bus voltage rise and avoid over-voltage fault. The greater the over-excitation gain, the stronger the suppression effect.

The over-excitation gain should be improved when the speed process of frequency converter is easy to alarm over-voltage. However, over-excitation gain is too large, which can easily lead to the increase of output current, so it needs to be weighed in application.

When the inertia is very small, there will be no voltage rise in the motor deceleration, it is recommended to set the over-excitation gain to 0; for the case of braking resistance, it is also recommended to set the over-excitation gain to 0.

F3.11	VF oscillation suppression gain	Default	Type dependant
	Setting range	0～100	

The method of selecting the gain is to minimize the oscillation under the premise of effectively suppressing the oscillation, so as not to have adverse effects on the operation of VF. When there is no oscillation in the motor, please select the gain of 0. Only when the motor oscillates obviously, the gain should be increased appropriately. The larger the gain, the more obvious the suppression of the oscillation will be.

When using the function of suppressing oscillation, the motor rated current and no-load current parameters should be accurate, otherwise the effect of suppressing VF oscillation is not good.

F4 Digital input and output terminals

F4.00	Terminal command mode		Default	0
	Setting range	0	Two- line 1	
		1	Two- line 2	
		2	Three-line 1	

		3	Three- line 2
		4	Electronic cam two lines 3

This parameter defines four different ways to control the operation of the converter through external terminals.

Note: For the convenience of explanation, the X1, X2 and X3 terminals in the multi-functional input terminals of X1-X7 are chosen as the external terminals. That is to say, the functions of X1, X2 and X3 terminals are selected by setting the values of F4.01-F4.03. Detailed functional definitions can be found in the setting range of F4.01-F4.06.

0: Two-line mode 1: This mode is the most commonly used two-line mode. The positive and reverse operation of the motor is determined by terminals X1 and X2.

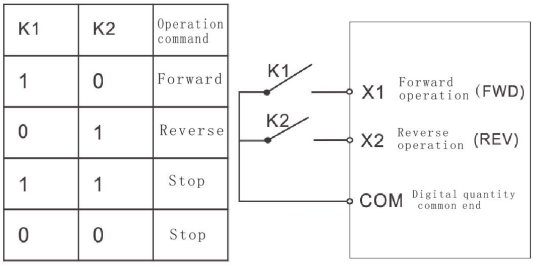

Figure 6-8 Two-line Mode 1

As shown in the figure above, under this control mode, K1 is closed and the converter is running forward. K2 is closed and reversed, K1 and K2 are closed or disconnected at the same time, and the converter stops running.

1: Two-line mode 2: When using this mode, the function of X1 terminal is the operation enabling terminal, while the function of X2 terminal determines the direction of operation.

K1	K2	Operation command
1	0	Forward
1	1	Reverse
0	0	Stop
0	1	Stop

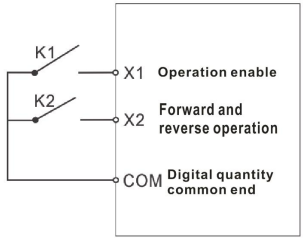

Figure 6-9 Two-line Mode 2

As shown in the figure above, the control mode is in K1 closed state, K2 disconnects the converter forward. The K2 closed converter is reversed; the K1 is disconnected and the converter stops running.

2: Three-line control mode 1: This mode X3 is an enabling terminal, and its direction is controlled by X1 and X2 respectively.

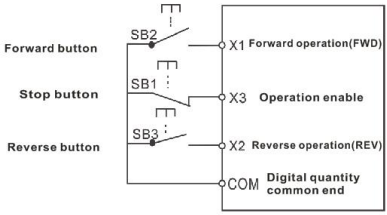

Figure 6-10 Three-line Control Mode 1

As shown in the figure above, the control mode in the closed state of SB1 button, press SB2 button converter forward, press SB3 button converter reverse, SB1 button disconnect instantaneous frequency converter shutdown. During normal start-up and operation, it is necessary to keep the SB1 button closed. The commands of SB2 and SB3 buttons will take effect immediately along the closed action. The operation status of the converter is based on the key action after the three buttons.

3: Three-line control mode 2: The X3 of this mode is the enabling terminal, the operation command is given by X1, and the direction is determined by the state of X 2.

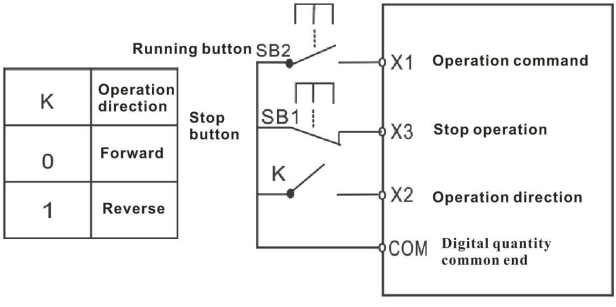

Figure 6-11 Three-line Control Mode 2

As shown in the figure above, the control mode is in the closed state of SB1 button. Press SB2 button to run the converter. K disconnects the converter forward, K closes the converter reverse, and SB1 button disconnects the instantaneous converter to shut down. During normal start-up and operation, it is necessary to keep the SB1 button closed, and the command of SB2 button will take effect along the closed action.

4: Electronic cam two-line control mode 3

X1 operation enablement, X2 operation, X3 shutdown; X1 as long as it is disconnected, it is an external shutdown signal with the highest priority; X2 closure, operation; X2 closure, X3 shutdown signal closure is invalid; when X2 is disconnected, X3 closure, shutdown;

Functional code	Name	Setting range	Set value
F4.00	Terminal command mode	4: Two-line 3	4
F4.01	X1 terminal function selection	48: External stalling terminal 2	48
F4.02	X2 terminal	1：Forward	1

	function selection		
F4.03	X3 terminal function selection	61:F4.00 = 4, stalling terminal	61
F4.16	X-terminal valid logic	1:X1 terminal inverse logic efficiency	1
F8.21	Deceleration time 4	When X1 is disconnected, stop at deceleration time 4	

Functional code	Name	Default	Note
F4.01	X1 terminal function selection	1 (forward running)	Standard
F4.02	X2 terminal function selection	2 (Reverse operation)	Standard
F4.03	X3 terminal function selection	0	Standard
F4.04	X4 terminal function selection	0	Standard
F4.05	X5 terminal function selection	0	Standard
F4.06	X6 terminal function selection	0	Standard
F4.07	X7 terminal function selection	0	

These parameters are used to set the function of the digital multi-functional input terminal.

The optional functions are shown in the following table:

Set value	Function	Descriptions
0	No functions	Non-use terminals can be set as "no-function" to prevent misoperation.
1	Forward running	The external terminals are used to control the forward and reverse of the converter.
2	Reverse operation	
3	Three-line operation control;	Through this terminal, it is determined that the operation mode of the converter is three-line control mode. For details, please refer to the description of function code F4.00 ("terminal command mode").
4	Forward point motion	FJOG runs as point-to-point forward and RJOG runs as point-to-point reverse. Refer to the description of function codes F0.28, F0.29 and F0.30 for the operation frequency and acceleration and deceleration time.
5	Reverse point motion	
6	Terminal UP	When the frequency is given by the external terminal, the

7	Terminal DOWN	increasing and decreasing instructions of the frequency are modified. When the frequency instruction is set to digital setting, the setting frequency can be adjusted up and down.
8	Coast to stop	Frequency converter blockades the output, and the motor stopping process is not controlled by frequency converter. This method has the same meaning as free parking described in F6.07.
9	Fault reset (RESET)	The function of fault reset by terminal. The same function as RESET keys on the keyboard. With this function, remote fault reset can be realized.
10	Operation pause	Frequency converter reduces speed and stops, but all operation parameters are memorized. Such as PLC parameters, swing frequency parameters, PID parameters. After the terminal signal disappears, the frequency converter restores to the running state before stalling.
11	External fault normal open input	When the signal is sent to the converter, the converter reports a fault E015 and handles the fault according to the action mode of fault protection (Refer to the function code Fb.13 in detail).
12	Multistage speed terminal 1	Through the 16 states of these four terminals, 16 segments of speed or 16 other instructions can be set. Details can be found in Schedule 1.
13	Multistage speed terminal 2	
14	Multistage speed terminal 3	
15	Multistage speed terminal 4	
16	Acceleration and deceleration time selection terminal 1	Through the four states of these two terminals, four kinds of acceleration and deceleration time are selected. Details are shown in Schedule 2.
17	Acceleration and deceleration time selection terminal 2	
18	Frequency instruction switching	Used to switch and select different frequency instructions. According to the setting of frequency instruction selection function code (F0.04), when switching between two kinds of frequency instructions is set as frequency instruction, the terminal is used to realize switching between two kinds of frequency instructions.
19	UP/DOWN Setting zero (terminal, keyboard)	When the frequency is given as a digital frequency, the terminal can clear the frequency value changed by the terminal UP/DOWN or the keyboard UP/DOWN, so that the given frequency can be restored to the value set by F0.09.
20	Running command switching terminal 1	When the command source is set to terminal control (F0.01=1), the terminal can switch between terminal control and keyboard control. When the command source is set to communication control (F0.01=2), this terminal can switch between

		communication control and keyboard control.
21	Acceleration and deceleration prohibition	Ensure that the frequency converter is not affected by external signals (except stop commands), and maintain the current output frequency.
22	PID pause	The PID is temporarily invalid, the converter maintains the current output frequency, and no longer performs PID adjustment of frequency instructions.
23	PLC state reset	PLC is suspended in the process of execution, and when it runs again, the frequency converter can be restored to the initial state of simple PLC through this terminal.
24	Swing frequency pause	The converter is output at the central frequency. The swing function is suspended.
25	counting input	The input terminal of counting pulse.
26	Counting reset	The counter state is zeroed out.
27	Length counting input	Input terminal for length counting.
28	Length reset	Length cleared
29	Torque control prohibition	Torque control is forbidden by frequency converter, and speed control mode is forbidden by frequency converter.
30	PULSE (pulse) frequency input (X5 only)	The function of X5 as a pulse input terminal.
31	Reserved	Reserved
32	Immediate direct current braking	When the terminal is valid, the frequency converter can be directly switched to DC braking state.
33	External fault normally closed input	When the external fault normal closed signal is sent into the converter, the converter reports the fault E015 and shuts down.
34	Frequency modification enable	If the function is set to be effective, the frequency converter does not respond to the frequency change until the terminal state is invalid when the frequency changes.
35	PID action inverse direction	When the terminal is valid, the direction of action of PID is opposite to that set by F9.03.
36	External stalling terminal 1	When it is controlled by the keyboard , the terminal can be used to shut down the frequency converter, which is equivalent to the function of STOP key on the keyboard.
37	Running command switching terminal 2	Used for switching between terminal control and communication control. If the command source is chosen as terminal control, the system will switch to communication control when the terminal is valid, and vice versa.
38	PID integral suspension	When the terminal is valid, the integral adjustment function of the PID is suspended, but the proportional and differential adjustment functions of the PID are still valid.
39	Primary frequency instruction and preset frequency switching	If the terminal is valid, the main frequency instruction is replaced by the preset frequency (F0.09).

40	Auxiliary frequency instruction and preset frequency switching	If the terminal is valid, the auxiliary frequency instruction is replaced by the preset frequency (F0.09).
41	Forward JOG (priority)	When the terminal runs the command channel valid, click always takes precedence.
42	Reverse JOG (priority)	
43	PID parameter switching	When the switching condition of PID parameters is X terminal (F9.18=1), when the terminal is invalid, the PID parameters are F9.05-F9.07, and F9.15-F9.17 when the terminal is valid.
44	User-defined fault 1	When user-defined faults 1 and 2 are valid, the converter will alarm E027 and E028 respectively, and the converter will select the action mode selected by Fb.15 according to the fault protection action to process.
45	User-defined fault 2	
46	Speed/torque control switching	Switch the frequency converter between the torque control mode and the speed control mode. When the terminal is invalid, the converter runs in the mode defined by F2.23 (speed/torque control mode), and if the terminal is valid, it switches to another mode.
47	Emergency shut-down	When the terminal is valid, the frequency converter stops at the fastest speed, and the current in the stopping process is in the set upper current limit. This function is used to meet the requirement that the frequency converter should be shut down as soon as possible when the system is in emergency.
48	External shutdown terminal 2	In any control mode (panel control, terminal control, communication control), the terminal can be used to make the frequency converter slow down and stop, at this time the deceleration time is fixed to deceleration time 4.
49	Deceleration DC braking	When the terminal is valid, the frequency converter first reduces to the starting frequency of DC braking during shutdown, and then switches to the DC braking state.
50	This run-time clearing	When the terminal is valid, the timing time of the current operation of the converter is cleared. This function needs to be used in conjunction with the timing operation (F8.33) and the arrival time of the current operation (F8.34).
51	Two-line/three-line switching	Used for switching between two-line and three-line control. If F4.00 is two-line 1, the terminal will switch to three-line 1 when its function is effective. And so on.
53	Multistage closed loop terminal 1	Through the eight states of the three terminals (FA.00~FA.07), eight closed-loop designs can be achieved. Details are shown in Table 4.
54	Multistage closed loop terminal 2	
55	Multistage closed loop terminal 3	
56	Multistage frequency terminal 1	Through the seven states of the three terminals (F8.01~F8.07), no matter how much F0.02 is set, the multistage frequency terminal always has the highest
57	Multistage frequency	

	terminal 2	priority.
58	Multistage frequency terminal 3	
59	Reserved	
60	Motor selection terminal	When this terminal setting is valid, the second motor (Group A0) is valid.

Four multistage instruction terminals can be combined into 16 states, which correspond to 16 instruction settings. As shown in Table 1:

Schedule 1 Multistage Instruction Function Description

K4	K3	K2	K1	Instruction setting	Corresponding parameters
OFF	OFF	OFF	OFF	Multistage instruction0	FA.00
OFF	OFF	OFF	ON	Multistage instruction1	FA.01
OFF	OFF	ON	OFF	Multistage instruction2	FA.02
OFF	OFF	ON	ON	Multistage instruction3	FA.03
OFF	ON	OFF	OFF	Multistage instruction4	FA.04
OFF	ON	OFF	ON	Multistage instruction5	FA.05
OFF	ON	ON	OFF	Multistage instruction6	FA.06
OFF	ON	ON	ON	Multistage instruction7	FA.07
ON	OFF	OFF	OFF	Multistage instruction8	FA.08
ON	OFF	OFF	ON	Multistage instruction9	FA.09
ON	OFF	ON	OFF	Multistage instruction10	FA.10
ON	OFF	ON	ON	Multistage instruction11	FA.11
ON	ON	OFF	OFF	Multistage instruction12	FA.12
ON	ON	OFF	ON	Multistage instruction13	FA.13
ON	ON	ON	OFF	Multistage instruction14	FA.14
ON	ON	ON	ON	Multistage instruction15	FA.15

When the frequency instruction is selected as multi-segment speed, the function code FA.00-FA.15 is 100.0%, corresponding to the maximum frequency.

In addition to the function of multi-segment speed, multi-segment instruction can also be used as a given source of PID or a voltage source of VF separation control to meet the need of switching between different given values.

Schedule 2 Explanation of acceleration and deceleration time selection terminal function

Terminal2	Terminal1	Acceleration/deceleration time selection	Corresponding parameters
OFF	OFF	Acceleration time 1	F0.21、F0.22
OFF	ON	Acceleration time 2	F8.16、F8.17
ON	OFF	Acceleration time 3	F8.18、F8.19
ON	ON	Acceleration time 4	F8.20、F8.21

Table 3 Function fo motor selection terminal

Terminal2	Terminal1	Motor selection	Corresponding parameter unit
OFF	OFF	Motor 1	F1、F2 unit
OFF	ON	Motor 2	A0 unit

Schedule 4 Multi-point closed-loop given function description

Terminal 3	Terminal 2	Terminal 1	Instruction setting	Corresponding parameters
OFF	OFF	OFF	Multistage closed-loop given invalid	FA.00
OFF	OFF	ON	Multistage given1	FA.01
OFF	ON	OFF	Multistage given2	FA.02
OFF	ON	ON	Multistage given3	FA.03
ON	OFF	OFF	Multistage given4	FA.04
ON	OFF	ON	Multistage given5	FA.05
ON	ON	OFF	Multistage given6	FA.06
ON	ON	ON	Multistage given7	FA.07

Schedule 5 Multistage frequency given function description

Terminal 3（58）	Terminal2（57）	Terminal1（56）	Multistage frequency setting	Corresponding parameters
OFF	OFF	OFF	Multistage frequency invalid	F0.02 Frequency input channel set value
OFF	OFF	ON	Multistage frequency1	F8.01
OFF	ON	OFF	Multistage frequency2	F8.02
OFF	ON	ON	Multistage frequency3	F8.03
ON	OFF	OFF	Multistage frequency4	F8.04
ON	OFF	ON	Multistage frequency5	F8.05
ON	ON	OFF	Multistage frequency6	F8.06
ON	ON	ON	Multistage frequency7	F8.07

F4.11	X-terminal filtering time	Default	0.010s
	Setting range	0.000s～1.000s	

Set the software filtering time of X terminal state. If the input terminal is susceptible to interference and causes misoperation in use, this parameter can be increased to enhance the anti-interference ability. However, the increase of the filtering time will slow down the response of X terminal.

F4.12	Terminal UP/DOWN change rate	Default	1.000Hz/s
	Setting range	0.001Hz/s～65.535Hz/s	

Used to set the terminal UP/DOWN to adjust the set frequency, the speed of frequency change, that is, the change of frequency per second.

When F0.11 (frequency decimal point) is 2, the value ranges from 0.001 Hz/s to 65.535 Hz/s.

When F0.11 (frequency decimal point) is 1, the value ranges from 0.01 Hz/s to 655.35 Hz/s.

F4.13	X1 delay time	Default	0.0s
	Setting range	0.0s～3600.0s	
F4.14	X2 delay time	Default	0.0s
	Setting range	0.0s～3600.0s	
F4.15	X3 delay time	Default	0.0s
	Setting range	0.0s～3600.0s	

when the state of X terminal changes,it is used to set the delay time of the converter

At present, only X1, X2 and X3 have the function of setting delay time.

F4.16	X-terminal effective mode selection 1		Default	00000
	Setting range	Unit's digit	X1 terminal effective state setting	
		0	High level effective	
		1	Low level effective	
		Ten's digit	X2 terminal effective state setting (0-1, ibid.)	
		Hundred's digit	X3 terminal effective state setting (0-1, ibid.)	
		Thousand's digit	X4 terminal effective state setting (0-1, ibid.)	
		Ten thousand's	X5 terminal effective state setting (0-1, ibid.)	

		digit	
F4.17	X-terminal effective mode selection 2	Default	00000
	Setting range	Unit's digit	X6 terminal effective state setting
		0	High level effective
		1	Low level effective
		Ten's digit	X7 terminal effective state setting
		Hundred's digit	Reserved
		Thousand's digit	Reserved
		Ten thousand's digit	Reserved

Used to set the effective state mode of the digital input terminal.

When the selected high level is valid, the corresponding X terminal is valid when connected with COM, and the disconnection is invalid.

When the low level is selected as valid, the corresponding X terminal is invalid when connected to COM, and the disconnection is valid.

F4.29	DO-R function selection (collector open-circuit output terminal)	Default	3
F4.30	Relay output function selection (TA-TB-TC)	Default	2
F4.31	Relay output function selection（PA-PB-PC）	Default	1
F4.32	Y1 function selection (collector open-circuit output terminal)	Default	1
F4.33	Y2 function selection (collector open-circuit output terminal)	Default	1
F4.34	Y3 function selection (collector open-circuit output terminal)	Default	1

The six function codes mentioned above are used to select six digital output functions, of which TA-TB-TC and PA-PB-PC are relays on the control board respectively, Y1, Y2, Y3 and DO are open collector outputs. Y1 and Y3 can be used as a backup timing switching terminal for water supply (Y1-first pump frequency conversion, Y2 second pump frequency conversion). Y2, Y3 and DO can be used as water supply one by one supplement one by two (Y1-first pump frequency conversion, Y2-first pump frequency conversion, Y3-second pump frequency conversion, DO-second pump frequency conversion).

The functions of the multi-functional output terminal are described as follows:

Set value	Function	Description
0	No output	Output terminal has no function

1	Frequency converter in operation	Indicates that the converter is in operation and has an output frequency (which can be zero), at which time the ON signal is output.
2	Fault output (fault shut-down)	When the converter fails and the fault stops, the ON signal is output.
3	Frequency level detection FDT1 output	Please refer to the instructions of function codes F4.54 and F4.55.
4	Frequency arrival	Please refer to the instructions of function codes F4.56
5	Zero-speed operation (no output when shutdown)	When the frequency converter runs and the output frequency is 0, the ON signal is output. The signal is OFF when the converter is down.
6	Motor overload forecasting alarm	Before motor overload protection action, the ON signal is output after exceeding the threshold value of overload prediction alarm. For motor overload parameter setting, refer to function codes Fb.00-Fb.02.
7	Frequency converter overload forecasting alarm	The ON signal is output 10 seconds before the overload protection occurs.
8	Set count value to arrive	When the count value reaches the value set by FA.60, the ON signal is output.
9	Designated count value arrives	When the count value reaches the value set by FA.61, the ON signal is output. Counting function reference Group FA function description
10	Length arrival	When the actual length of detection exceeds the length set by FA.57, the ON signal is output.
11	PLC cycle completion	When the simple PLC completes a cycle, it outputs a pulse signal with a width of 250ms.
12	Accumulated runtime arrival	When the accumulative running time of the converter exceeds the set time of F8.28, the ON signal is output.
13	Frequency limitation	When the set frequency exceeds the upper or lower limit frequency and the output frequency of the converter reaches the upper or lower limit frequency, the ON signal is output.
14	Torque Limitation	In the speed control mode, when the output torque reaches the limit value of the torque, the converter is in stall protection state, and the ON signal is output at the same time.
15	Ready for operation	When the power supply of the main circuit and control circuit of the converter is stable, and the converter does not detect any fault information, and the converter is in the operational state, the ON signal is output.
16	AI1>AI2	When the value of analog input AI1 is greater than that of AI2, the ON signal is output.
17	Upper limit frequency arrival	When the operating frequency reaches the upper limit frequency, the ON signal is output.
18	Lower limit frequency arrival (No output on shutdown)	When the operating frequency reaches the lower limit frequency, the ON signal is output. The signal is OFF in downtime.

19	Under-voltage state output	When the converter is under-voltage, the ON signal is output.
20	Communication setting	Please refer to the communication protocol.
21	FDT2 non-standard output	When the output frequency is greater than F4.57 and the output current is greater than F4.67, the ON signal is output. Output OFF signal when output frequency is less than F4.57 or downtime
22	Reserved	Reserved
23	Zero speed operation 2 (output while down)	When the output frequency of the converter is 0, the ON signal is output. The signal is ON when the machine is down.
24	Accumulated power-on time arrives	When the accumulative power-on time of the converter (F7.28) exceeds the set time of F8.27, the ON signal is output.
25	Frequency level detection FDT2 output	Please refer to the instructions of function codes F4.57 and F4.58.
26	Frequency 1 arrives at output	Please refer to the instructions of function codes F4.59 and F4.60.
27	Frequency 2 arrives at output	Please refer to the instructions of function codes F4.61 and F4.62.
28	Current 1 reaches output	Please refer to the instructions of function codes F4.67 and F4.68.
29	Current 1 reaches output	Please refer to the instructions of function codes F4.69 and F4.70.
30	Timing to output	When the timing function selection (F8.32) is valid, the ON signal is output after the frequency converter reaches the set timing time.
31	AI1 input overrun	When the value of analog input AI1 is greater than F4.72 (upper limit of AI1 input protection) or less than F4.73 (lower limit of AI1 input protection), the ON signal is output.
32	Load drop	When the frequency converter is in the state of off-load, the ON signal (Fb.30) is output.
33	In reverse operation	Converter in reverse operation, output ON signal
34	Zero current state	Please refer to the instructions of function codes F4.63 and F4.64.
35	Module temperature arrival	When the module radiator temperature (F7.24) of the converter reaches the set module temperature (F4.73), the ON signal is output.
36	Reserved	
37	Lower limit frequency arrival (output while down)	ON signal output during running frequency arrives below limit. Shutdown status as ON signal.
38	Alarm output	When the converter fails and the fault processing mode is to continue running, the converter alarm output.
40	This run time arrives	When the starting time of the converter exceeds the time set by F8.28, the ON signal is output.

41	Fault output	Fault output (free shutdown fails and under-voltage non-output)

F4.35	DO-R output delay time	Default	0.0s
	Setting range	0.0s～3600.0s	
F4.36	RELAY1(TA/TB/TC) output delay time	Default	0.0s
	Setting range	0.0s～3600.0s	
F4.37	RELAY2(PA/PB/PC) output delay time	Default	0.0s
	Setting range	0.0s～3600.0s	
F4.38	Y1 output delay time	Default	0.0s
	Setting range	0.0s～3600.0s	
F4.39	Y2 output delay time	Default	0.0s
	Setting range	0.0s～3600.0s	
F4.40	Y3 output delay time	Default	0.0s
	Setting range	0.0s～3600.0s	

Set the delay time of output terminal DO-R, relay 1, relay 2, Y1, Y2, Y3 from state change to actual output change.

F4.41	Y output terminal effective state selection		Default	00000
	Setting range	Unit's digit	DOR effective state selection	
		0	Positive logic	
		1	Negative logic	
		Ten's digit	RELAY1 (TA/TB/TC) effective state setting (0-1, ibid.)	
		Hundred's digit	RELAY2(PA/PC) effective state setting (0-1, ibid.)	
		Thousand's digit	Y1 output terminal effective state setting (0-1, ibid.)	
		Ten thousand's digit	Y2 output terminal effective state setting (0-1, ibid.)	
F4.42	Y output terminal effective state selection		Default	00000
	Setting range	Unit's digit	Y3 effective state selection	
		0	Positive logic	

		1	Negative logic
		Ten's digit	Reserved
		Hundred's digit	Reserved
		Thousand 's digit	Reserved
		Ten thousand's digit	Reserved

The output logic of output terminal DOR, relay 1, relay 2, Y1, Y2 and Y3 is defined.

0: Positive logic, the digital output terminal and the corresponding common terminal are connected to an effective state and disconnected to an invalid state.

1: Inverse logic, the digital output terminal and the corresponding common terminal are connected to an invalid state and disconnected to an effective state.

F4.54	Frequency detection value (FDT1)	Default	50.00Hz
	Setting range	0.00Hz～maximum frequency	
F4.55	Frequency detection lag value (FDT1)	Default	5.0%
	Setting range	0.0%-100.0%(FDT1 level)	

When the operating frequency is higher than the frequency detection value, the converter multi-functional output Y output ON signal, and when the frequency is lower than a certain frequency value of the detection value, Y output ON signal is cancelled.

The above parameters are used to set the detection value of the output frequency and the lag value of the output action relief. Among them, F4.55 is the percentage of hysteresis frequency relative to frequency detection value F4.54. Figure 6-12 is a schematic diagram of the FDT function.

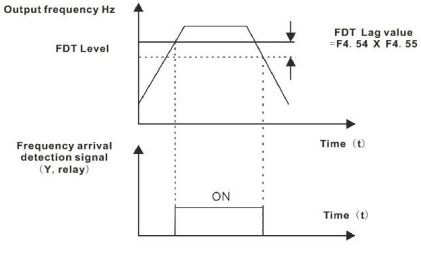

Figure 6-12 FDT level diagram

F4.56	Frequency arrival detection width	Default	0.0%
	Setting range	0.00～100% maximum frequency	

When the frequency of the converter is within a certain range of the target frequency, the multi-functional Y-output ON signal of the converter.

This parameter is used to set the detection range of frequency arrival, which is the percentage relative to the maximum frequency. Figure 6-13 is a diagram of frequency arrival.

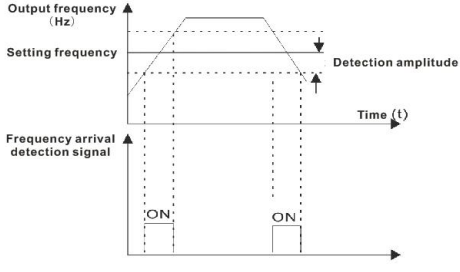

Figure 6-13 schematic diagram of frequency arrival detection amplitude

F4.57	Frequency detection value (FDT2)	Default	50.00Hz
	Setting range	0.00Hz～maximum frequency	
F4.58	Frequency detection lag value (FDT2)	Default	0.0%
	Setting range	0.0%～100.0%（FDT2 level）	

The function of frequency detection is exactly the same as that of FDT1. Please refer to the relevant instructions of FDT1, that is, the instructions of function codes F4.54 and F4.55.

F4.59	Arbitrary arrival frequency detection value 1	Default	50.00Hz

	Setting range	0.00Hz～maximum frequency	
F4.60	Detection width of arbitrary arrival frequency 1	Default	0.0%
	Setting range	0.0%～100.0% maximum frequency	
F4.61	Arbitrary arrival frequency detection value 2	Default	50.00Hz
	Setting range	0.00Hz～maximum frequency	
F4.62	Detection width of arbitrary arrival frequency 2	Default	0.0%
	Setting range	0.0%～100.0% (maximum frequency)	

When the output frequency of the converter is within the range of positive and negative detection range of any frequency detection value, the multi-functional Y output ON signal. T510 provides two sets of arbitrary arrival frequency detection parameters, setting the frequency value and frequency detection range respectively.

Figure 6-14 Schematic diagram of this function.

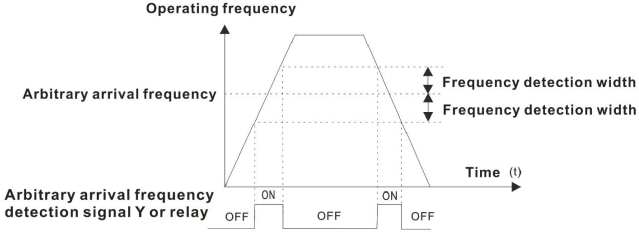

Figure 6-14 Arbitrary arrival frequency detection diagram

F4.63	Zero current detection level	Default	5.0%
	Setting range	0.0%～300.0%（motor rated current）	
F4.64	Zero current detection delay time	Default	0.10s
	Setting range	0.00s～600.00s	

When the output current of the converter is less than or equal to the zero current detection level, and the duration exceeds the zero current detection delay time, the multi-functional Y output ON signal of the converter.

Fig. 6-15 Schematic diagram of zero-current detection .

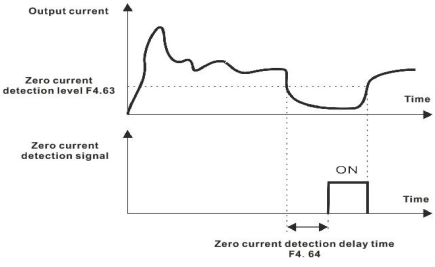

Fig. 6-15 Schematic diagram of zero-current detection .

F4.67	Arbitrary arrival current 1	Factory default	100.0%
	Setting range	0.0%～300.0%（motor rated current）	
F4.68	Arbitrary arrival current 1 width	Factory default	0.0%
	Setting range	0.0%～300.0%（motor rated current）	
F4.69	Arbitrary arrival current 2	Factory default	100.0%
	Setting range	0.0%～300.0%（motor rated current）	
F4.70	Arbitrary arrival current 2 width	Factory default	0.0%
	Setting range	0.0%～300.0%（motor rated current）	

When the output current of the frequency converter is within the positive and negative detection width of any arrival current, the multi-functional Y output ON signal of the frequency converter.

T510 provides two sets of arbitrary arrival current and detection width parameters.

Figure 6-16 Functional diagram.

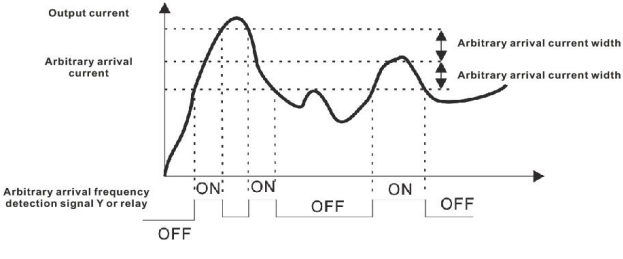

Figure 6-16 Arbitrary arrival current detection diagram

F4.71	Lower limit of AI1 input voltage protection value	Default	3.10V
	Setting range	0.00V～F4.72	
F4.72	Upper limit of AI1 input voltage protection value	Default	6.80V
	Setting range	F4.71～10.00V	

When the analog input value of AI1 is greater than F4.72 or the input value of AI1 is less than F4.71, the multi-functional Y output "AI1 input exceeding limit" ON signal is used to indicate whether the input voltage of AI1 is within the set range.

F4.73	Module temperature arrival	Default	75℃
	Setting range	0.0～100℃	

When the temperature of the inverter radiator reaches this temperature, the multi-functional Y-converter outputs the ON signal of "module temperature arrival".

Group F5 Analog input unit , analog output unit

F5.00	AI1 Input signal selection		Default	0
	Setting range	0	Voltage signal	
		1	Current signal	

When the AI1 input signal is 4-20 mA, the J1 dial switch or jumper jumps to the A terminal when facing the control board, and the F5.00=1 is modified.

F5.01	AI curve 1 minimum input	Default	0.00V
	Setting range	0.00V～F5.03	
F5.02	Minimum input correspondence setting of AI curve 1	Default	0.0%
	Setting range	-100.00%～100.0%	
F5.03	AI curve 1 maximum input	Default	10.00V
	Setting range	F5.01～10.00V	
F5.04	Maximum input correspondence setting of AI curve 1	Default	100.0%
	Setting range	-100.00%～100.0%	
F5.05	AI1 filtering time	Default	0.10s

	Setting range	0.00s～10.00s

The above function codes are used to set up the relationship between the input voltage of analog quantity and the set value it represents.

Similarly, when the input voltage of the analog is greater than the set "maximum input" (F5.03), the analog voltage is calculated according to the "maximum input". Similarly, when the input voltage of the analog is less than the set "minimum input" (F5.01), the minimum input is determined according to the "AI is lower than the set minimum input" (F5.23). Or 0.0% calculation.

When the analog input is current input, 1 mA current equals 0.5V voltage.

AI1 input filtering time is used to set the software filtering time of AI1. When the field analog is easily disturbed, increase the filtering time to make the detection analog tend to be stable, but the larger the filtering time, the slower the response speed to the analog detection. How to set it needs to be weighed according to the actual application.

In different applications, the meanings of the nominal values corresponding to 100.0% of the simulation settings are different. Please refer to the instructions in each application section.

F5.06	AI2 input signal selection		Default	0
	Setting range	0	Voltage signal	
		1	Current signal	

When the AI2 input signal is 4-20 mA, the J2 dial switch or jumper jumps to the A terminal when facing the control board, and the F5.00=1 is modified.

F5.07	AI curve 2 minimum input	Default	0.00V
	Setting range	0.00V～F5.09	
F5.08	Minimum input correspondence setting of AI curve 2	Default	0.0%
	Setting range	-100.00%～100.0%	
F5.09	AI curve 2 maximum input	Default	10.00V
	Setting range	F5.07～10.00V	
F5.10	maximum input correspondence setting of AI curve 2	Default	100.0%
	Setting range	-100.00%～100.0%	
F5.11	AI2 filtering time	Default	0.10s

	Setting range	0.00s～10.00s

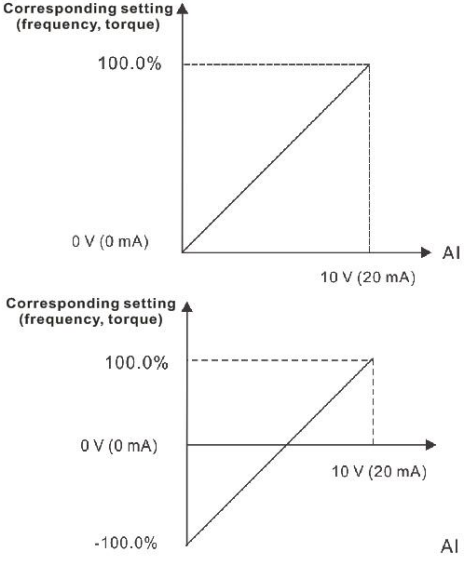

Figure 6-17 The correspondence relationship between analog given and set amount

F5.12	Panel potentiometer minimum input	Default	-9.50V
	Setting range	-10.00～F5.14	
F5.13	Minimum input correspondence setting of panel potentiometer	Default	0.0%
	Setting range	0.00%～100.0%	
F5.14	Maximum input of panel potentiometer	Default	9.50V
	Setting range	F5.12～10.00V	
F5.15	Maximum input correspondence setting of panel potentiometer	Default	100.0%

	Setting range	-100.00%～100.0%	
F5.16	Panel potentiometer filtering time	Default	0.10s
	Setting range	0.00s～10.00s	

The function and usage of Curve 3, please refer to the description of Curve 1.

F5.17	PULSE minimum input	Default	0.00kHz
	Setting range	0.00kHz～F5.19	
F5.18	Minimum input correspondence setting of PULSE	Default	0.0%
	Setting range	-100.00%～100.0%	
F5.19	PULSE maximum input	Default	50.00kHz
	Setting range	F5.17～100.00kHz	
F5.20	Maximum input correspondence setting of PULSE	Default	100.0%
	Setting range	-100.00%～100.0%	
F5.21	PULSE filtering time	Default	0.10s

This set of function codes is used to set up the relationship between the X5 pulse frequency and the corresponding settings.

Pulse frequency can only be input to the converter through X5 channel.

F5.22	AI curve selection		Default	321
	Setting range	Unit's digit	AI1 curve selection	
		1	Curve 1 (2 points, see F5.01-F5.04)	
		2	Curve 2 (2 points, see F5.06-F5.10)	
		3	Curve 3 (2 points, see F5.12-F5.16)	
		4	Curve 4 (4 points, see F6.00-F6.06)	
		5	Curve 5 (4 points, see F6.08-F6.15)	
		Ten"s digit	AI2 curve selection (1-5,ibid)	
		Hundred's digit	Panel potentiometer(1-5,ibid)	

One bit, ten bit and hundred bit of the function code are used for selection, and the analog inputs are AI1, AI2 and the corresponding setting curve of the panel potentiometer. Each analog input can select any of the five curves.

Curve 1, curve 2 and curve 3 are two-point curves, which are set in F5 functional codes, while curve 4 and curve 5 are four-point curves, which are also set in A6 functional codes.

The standard unit of T510 converter provides two analog input ports.

F5.23	AI lower than minimum input	Default	000

	setting selection			
	Setting range	Unit's digit	AI lower than minimum input setting selection	
		0	Corresponding Minimum Input Setting	
		1	0.0%	
		Ten's digit	AI2 lower than minimum input setting selection (0-1,ibid)	
		Hundred's digit	The panel potentiometer is below the minimum input setting (0-1, ibid.)	

The function code is used for setting. When the input voltage of the analog quantity is less than the "minimum input" set, how to determine the corresponding setting of the analog quantity?

One bit, ten bit and hundred bit of the code are input into AI1, AI2 and panel potentiometer respectively.

If the selection is 0, when the AI input is lower than the "minimum input", the corresponding setting of the analog quantity is the "minimum input corresponding setting" of the curve determined by the function code (F5.01, F5.06, F5.11).

When the AI input is lower than the minimum input, the corresponding set of the analog value is 0.0% if 1 is chosen.

F5.24	DO terminal output mode selection		Default	1
	Setting range	0	PULSE output	
		1	Switch output (DO-R)	

The DO terminal is a programmable multiplex terminal, which can be used as a high-speed pulse output terminal (DO-P) or an open-circuit switch output terminal (DO-R).

When DO-R is output as an open collector, the relevant function code can be seen in the description of F4.29.

When DO-P is output as a pulse, the highest frequency of the output pulse is 100 kHz. The related functions of DO-P are described in F5.26.

F5.25	DO-P output maximum frequency	Default	50.00kHz
	Setting range	0.01kHz～100.00kHz	

When the DO terminal is selected as the pulse output, the function code is used to select the maximum frequency value of the output pulse.

F5.26	DO-P output function selection (pulse output terminal)	Default	0
F5.27	AO1 output function selection	Default	0
F5.28	AO2 output function selection	Default	1

The output pulse frequency range of DOP terminal is 0.01Kz-F5.25 (DOP maximum output frequency). F5.25 can be set between 0.01kHz and 100.00kHz.

The analog output AO1 and AO2 range from 0V～ 10V, or 0mA ～20mA.

The analog output AO1 chooses 0V～10V or 0mA～20mA through the control board dial switch J3.

The analog output AO2 chooses 0V～10V or 0mA～20mA through the control board dial switch J4.

The calibration relationship between the range of pulse output or analog output and the corresponding function is shown in the following table:

Set value	Function	Functions corresponding to 0.0%-100.0% pulse or analog output
0	Operation frequency	0～maximum output frequency
1	Set frequency	0～maximum output frequency
2	Output current	0-2 times motor rated current
3	Output torque (absolute value)	0-2 times motor rated torque
4	Output power	0-2 times rated power
5	Output voltage	0-1.2 times rated voltage
6	PULSE pulse input	0.01kHz～100.00kHz
7	AI1	0V～10V
8	AI2	0V～10V（or 0～20mA）
9	Panel potentiometer	0V～10V
10	Length	0～maximum set length
11	Count value	0～maximum count value
12	Communication setting	0.0%～100.0%
13	Motor rotating speed	0-max output frequency corresponding rotating speed

14	Output current	0.0A～000.0A
15	Output voltage	0.0V～1000.0V
16	Output torque (actual value)	-2 times motor rated torque～ 2 times motor rated torque

F5.29	AO1 output signal selection		Default	0
	Setting range	0	0-10V voltage or 0-20mA current signal	
		1	4～20mA current signal	

When AO1 output signal chooses 4-20 mA output, when facing the control board, jump the J3 dial switch or jumper on the control board to A, and modify F5.29=1.

F5.30	AO1 zero bias coefficient	Default	0.0%
	Setting range	-100.0%～+100.0%	
F5.31	AO1 gain	Default	1.00
	Setting range	-10.00～+10.00	
F5.32	AO2 zero bias coefficient	Default	0.00%
	Setting range	-100.0%～+100.0%	
F5.33	AO2 gain	Default	1.00
	Setting range	-10.00～+10.00	

These codes are generally used to correct the zero bias of analog output and the deviation of output amplitude. It can also be used to customize the required AO output curve. If AO1 outputs 4～ 20 mA, F5.30 = 20.0% and F5.31 = 0.80 need to be set.

If the zero offset is expressed by "b", the gain is expressed by k, the actual output is expressed by Y, and the standard output is expressed by X, the actual output is Y=kX+b.

Among them, the zero bias coefficients of AO1 and AO2 are 100% corresponding to 10V (or 20mA). Standard output refers to the output of 0V-10V (or 0mA-20mA) corresponding to analog output without zero bias and gain correction.

For example, if the analog output content is the operating frequency, it is expected to output 8V at the frequency of 0 and 3V at the maximum frequency, then the gain should be set to "-0.50" and the zero offset should be set to "80%.

Zero bias B = y-kx = y (x = 0) = 8v, zero bias coefficient 100% corresponds to 10v, so when B = 8v, the corresponding zero bias coefficient = 8V / 10V * 100% = 80%.

K = y-b) / x = actual output - bias / standard output = (3V - 8V) / 10V = 0.5.

F5.34	AO2 output signal selection		Default	0
	Setting range	0	0-10V voltage or 0-20mA current signal	
		1	4-20mA current signal	

When AO2 output signal chooses 4-20mA output, when facing the control board, jump J4 dial switch or jumper on the control board to A, and modify F5.34=1.

Group F6 start-stop control

F6.00	Starting mode		Default	0
	Setting range	0	Direct start	
		1	Speed tracking restart	
		2	Pre-excitation start (AC asynchronous motor)	

0: Direct start

If the starting DC braking time is set to 0, the frequency converter will start running from the starting frequency.

If the starting time of DC brake is not 0, DC brake is used first, and then starting from the starting frequency. Suitable for small inertia load, motor may rotate when starting.

1: Speed tracking and restart

Frequency converter first judges the speed and direction of the motor, then starts with the frequency of the motor tracked, and starts the motor in rotation smoothly and without impact. Suitable for instantaneous power cut and restart of large inertial load. In order to ensure the performance of speed tracking and restart, it is necessary to set the parameters of motor F1 accurately.

2: Asynchronous motor pre-excitation start-up

It is only effective for asynchronous motors. It is used to establish magnetic field before the motor runs.

The pre-excitation current and time are described in function codes F6.05 and F6.06.

If the pre-excitation time is set to 0, the converter cancels the pre-excitation process and starts from the starting frequency. If the pre-excitation time is not 0, the pre-excitation first and then the start-up can improve the dynamic response performance of the motor.

F6.01	Speed tracking mode		Default	0
	Setting range	0	Starting with downtime frequency	
		1	Starting at zero speed	
		2	Starting with maximum frequency	

In order to complete the speed tracking process in the shortest time, the frequency converter is selected to track the speed of the motor.

0: Tracking downward from the frequency of blackouts, usually in this way.

1: Tracking upward from 0 frequency, and use it in the case of long blackout time and restart.

2: Tracking down from the maximum frequency, general power generation load.

F6.02	Speed tracking speed	Default	20
	Setting range	1～100	

When the speed tracking is restarted, the speed tracking speed is selected.

The larger the parameters, the faster the tracking speed. However, too large settings may cause unreliable tracking effects.

F6.03	Starting frequency	Default	0.00Hz
	Setting range	0.00Hz～10.00Hz	
F6.04	Starting frequency holding time	Default	0.0s
	Setting range	0.0s～100.0s	

To ensure the motor torque at start-up, set the appropriate starting frequency. In order to fully establish the flux when the motor starts, it is necessary to keep the starting frequency for a certain period of time.

The starting frequency F6.03 is not limited by the lower limit frequency. But when the set target frequency is less than the start frequency, the converter does not start and is in standby state.

In the process of forward and backward switching, the start frequency retention time does not work.

Start frequency retention time is not included in acceleration time, but in the running time of simple PLC.

Example 1:

F0.02 = 0. Frequency instructions are given digitally

F0.09=2.00Hz Digital setting frequency is 2.00Hz

F6.03 = 5.00Hz and the starting frequency is 5.00Hz

F6.04=2.0s Start-up frequency retention time is 2.0S

At this time, the converter will be in standby state, and the output frequency of the converter is 0.00Hz.

Example 2:

F0.02 = 0. Frequency instructions are given digitally

F0.09=10.00Hz Digital setting frequency is 10.00Hz

F6.03 = 5.00Hz and the starting frequency is 5.00Hz

F6.04=2.0s Start-up frequency retention time is 2.0S

At this time, the converter accelerates to 5.00Hz, lasts 2.0s, and then accelerates to 10.00Hz at a given frequency.

F6.05	Starting DC brake current/pre-excitation current	Default	0%
	Setting range	0%～100%	
F6.06	Starting DC brake current/pre-excitation current	Default	0.0s
	Setting range	0.0s～100.0s	

To start DC brake, usually used to stop the running motor before starting. Pre-excitation is used to make the induction motor set up magnetic field before starting, so as to improve the response speed.

Starting DC brake is only effective when starting mode is direct starting. At this time, the frequency converter first carries out DC braking according to the set starting DC braking current, and then starts running after starting DC braking time. If the DC braking time is set to 0, direct start will not be carried out without DC braking. The greater the DC braking current, the greater the braking force.

If the starting mode is asynchronous motor pre-excitation, the converter first establishes the magnetic field according to the set pre-excitation current, and then starts operation after the set pre-excitation time. If the pre-excitation time is set to 0, it will start directly without pre-excitation process.

There are two cases of starting DC brake current/pre-excitation current.

1. When the rated current of the motor is less than or equal to 80% of the rated current of the frequency converter, it is the base percentage of the rated current of the relative motor.

2. When the rated current of the motor is greater than 80% of the rated current of the frequency converter, the rated current of the frequency converter is the percentage base value relative to 80% of the rated current of the frequency converter.

F6.07	Shut-down mode	Default	0
	Setting range	0	Deceleration to stop
		1	Coast to stop

0: Slow down

After the stop command is valid, the frequency converter reduces the output frequency according to the deceleration time, and then stops after the frequency drops to zero.

1: Free stop

When the stop order is valid, the frequency converter terminates the output immediately, and the motor stops freely according to the mechanical inertia.

F6.08	Starting frequency of DC brake in stop	Default	0.00Hz
	Setting range	0.00Hz～maximum frequency	
F6.09	Holding time of DC brake in stop	Default	0.0s
	Setting range	0.0s～36.0s	
F6.10	Current of DC brake in stop	Default	0%
	Setting range	0%～100%	
F6.11	Time of DC brake in stop	Default	0.0s
	Setting range	0.0s～36.0s	

Starting frequency of DC braking: In the process of decelerating and stopping, when the operating frequency is reduced to that frequency, the DC braking process begins.

Stop DC braking waiting time: After the operation frequency is reduced to the starting frequency of stop DC braking, the converter stops output for a period of time, and then starts the DC braking process. It is used to prevent overcurrent and other faults that may occur when DC braking starts at a higher speed.

1. When the rated current of the motor is less than or equal to 80% of the rated current of the frequency converter, it is the base percentage of the rated current of the relative motor.

2. When the rated current of the motor is greater than 80% of the rated current of the frequency converter, the rated current of the frequency converter is the base value of the percentage when the rated current of the motor is 80% of the rated current of the frequency converter.

Stop DC braking time: the time for DC braking quantity to be maintained. If this value is zero, the DC braking process is cancelled.

The stop DC braking process is shown in the schematic diagram of figure 6-18.

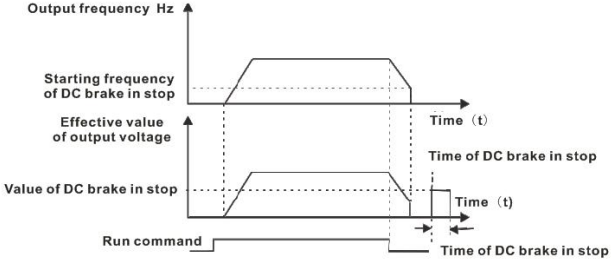

Figure 6-18 Schematic diagram of DC brake in stop

F6.12	The rate of brake usage	Default	100%
	Setting range	0%～100%	

It is only valid for converters with built-in brake units.

For adjusting duty cycle of brake unit, the brake unit has high duty cycle and braking effect, but the bus voltage of frequency converter fluctuates greatly during braking process.

Grope F7 Keyboard and Display

F7.02	LED operating monitoring parameter display selection 1	Default	1111
	Setting range	Unit's digit	L0.00 - operating frequency 1 (Hz)
		Ten's digit	L0.01 - setting frequency (Hz)
		Hundred's digit	L0.02-bus voltage
		Thousand's digit	L0.03-output voltage
		0	No display
		1	Display
F7.03	LED operating monitoring parameter display selection 2	Default	0001
	Setting range	Unit's digit	L0.04-output current（A）
		Ten's digit	L0.05-output power（kW）
		Hundred's digit	L0.07-output torque (%)
		Thousand's digit	L0.07-X input status
		0	No display
		1	Display
F7.04	LED operating monitoring parameter display selection 3	Default	0000
	Setting range	Unit's digit	L0.08-Y input status
		Ten's digit	L0.09-AI1 voltage（V）

		Hundred's digit	L0.10-AI2 voltage（V）
		Thousand's digit	L0.11- panel potentiometer voltage（V）
		0	No display
		1	Display
F7.05	LED operating monitoring parameter display selection 4	Default	0000
	Setting range	Unit's digit	L0.12 - count value
		Ten's digit	L0.13 - length value
		Hundred's digit	L0.14 - load speed display
		Thousand's digit	L0.15-PID setting
		0	No display
		1	Display
F7.06	LED operating monitoring parameter display selection 5	Default	0000
	Setting range	Unit's digit	L0.16-PID feedback
		Ten's digit	L0.17-PLC stage
		Hundred's digit	L0.18-PULSE input pulse frequency（kHz）
		Thousand's digit	L0.19-operating frequency 2（Hz）
		0	No display
		1	Display
F7.07	LED operating monitoring parameter display selection 6	Default	0000
	Setting range	Unit's digit	L0.20 - remaining runtime

		Ten's digit	L0.21-AI1 pre-correction voltage (V)
		Hundred's digit	L0.22-AI2 pre-correction voltage (V)
		Thousand's digit	L0.23 - Pre-correction Voltage (V) of Panel Potentiometer
		0	No display
		1	Display
F7.08	LED operating monitoring parameter display selection 7	Default	0000
	Setting range	Unit's digit	L0.24 - linear speed
		Ten's digit	L0.25-present power-on time（hour）
		Hundred's digit	L0.26 - present run time (min)
		Thousand's digit	L0.27-PULSE input pulse frequency (Hz)
		0	No display
		1	Display
F7.09	LED operating monitoring parameter display selection 8	Default	0000
	Setting range	Unit's digit	L0.28 - communication setting
		Ten's digit	L0.29 - encoder feedback speed (Hz)
		Hundred's digit	L0.30 - main frequency X display (Hz)
		Thousand's digit	L0.31-auxiliary frequency Y display (Hz)
		0	No display
		1	Display
F7.12	LED downtime monitoring parameter display selection 1	Default	0011

	Setting range	Unit's digit	L0.01-setting frequency（Hz）
		Ten's digit	L0.02-bus voltage（V)
		Hundred's digit	L0.07-X input status
		Thousand's digit	L0.08-Y output status
		0	No display
		1	Display
F7.13	LED downtime monitoring parameter display selection 2	Default	0011
	Setting range	Unit's digit	L0.09-AI1 voltage（V）
		Te's digit	L0.10-AI2 voltage（V）
		Hundred's digit	L0.11-panel potentiometer voltage（V）
		Thousand's digit	L0.12-count value
		0	No display
		1	Display
F7.14	LED downtime monitoring parameter display selection 3	Default	0000
	Setting range	Unit's digit	L0.13-length value
		Ten's digit	L0.17- PLC stage
		Hundred's digit	L0.14 - load speed
		Thousand's digit	L0.15- PID setting
		0	No display
		1	Display

F7.15	LED downtime monitoring parameter display selection 4	Default	0000
	Setting range	Unit's digit	L0.18- PULSE input pulse frequency（kHz）
		L0.18-PULSE input pulse frequency（kHz）	L0.16- PID feedback
		Hundred's digit	Reserved
		Thousand's digit	Reserved
		0	No display
		1	Display
F7.17	The second digital tube operating monitoring parameters display	Default	4
	Setting range	0-65 (corresponding to L0.00-L0.65)	
F7.18	The second digital tube downtime monitoring parameters display	default	2
	Setting range	0-65 (corresponding to L0.00-L0.65)	

When choosing the keyboard with double digital tube display, the monitoring parameters of the second digital tube during operation and shutdown are selected.

When F0.02 = 8 (PID is valid), the feedback pressure is displayed when the second digital tube runs and stops, that is F7.17 = F7.18 = 16.

F7.22	Load speed display coefficient		Default	100.00%
	Setting range		0.01%～200.00%	
F7.23	Load speed display decimal point number		Default	0
	Setting range	0	0 decimal digit	
		1	1 decimal digit	

		2	2decimal digit
		3	3decimal digit

The decimal point number used to set the load speed display. The following example illustrates how to calculate the load speed:

Normal conditions show that the corresponding motor rated frequency, if there is a deviation between the load speed and the display speed, it can be corrected by the adjustment coefficient F7.22.

If the frequency converter is in the downtime state, the load speed is displayed as the speed corresponding to the set frequency, that is, "set load speed". Taking the set speed of 1460 RPM as an example, the given speed of downtime load is 1460 * 200.00% = 2920.00 (2 decimal point display) rpm.

F7.24	Inverter module radiator temperature	Default	-
	Setting range	0～100℃	

Display the temperature of IGBT module.

IGBT overtemperature protection values of inverters of different models are different.

F7.27	Cumulative running time	Default	0 hour
	Setting range	0h～65535h	

Display the accumulative running time of the converter. When the running time reaches the set running time F8.28, the multi-functional digital output function (12) of the frequency converter outputs ON signal.

F7.28	Cumulative power-on time	Default	0 hour
	Setting range	0～65535 hour	

Displays the cumulative power-on time of the converter from the start of the factory.

When the time reaches the set power-on time (F8.27), the multi-functional digital output function (24) of the frequency converter outputs ON signal.

F7.29	Product ID	Default	-
	Setting range	Product ID	

Display the product ID of the converter, such as T510/T600 series, F7.29 = 510.00.

F7.30	Software version number	Default	-

	Setting range	Control board software version number

The software version number of the converter is displayed. The general converter F7.30 ranges from 1.0 to 9.9. If it is a non-standard converter, such as T600-51, the range of F7.30 is 511.0 to 519.9, and so on.

F7.31	Cumulative power consumption	Default	-
	Setting range	0~65535 degrees	

Display the cumulative power consumption of the converter so far.

F7.32	Output power correction coefficient	Default	100.00%
	Setting range	0.00～200.00%	

When the output power (L0.05) does not correspond to the expected value, the output power can be linearly corrected by this value.

Group 8 auxiliary function parameters

F8.00	Forward and reverse dead zone time	Default	0.0s
	Setting range	0.00s～3000.0s	

Set the transition time at the output 0Hz during the forward and reverse transition of the converter, as shown in Fig. 6-19:

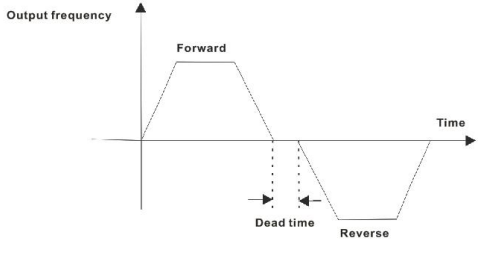

Figure 6-19 Forward and reverse dead zone time diagram

F8.01	Multistage frequency 1	Default	Related to the model.
	Setting range	0.00Hz ～ maximum frequency	

F8.02	Multistage frequency 2	Default	Related to the model.
	Setting range	0.00Hz ～ maximum frequency	
F8.03	Multistage frequency 3	Default	Related to the model.
	Setting range	0.00Hz ～ maximum frequency	
F8.04	Multistage frequency 4	Default	Related to the model.
	Setting range	0.00Hz ～ maximum frequency	
F8.05	Multistage frequency 5	Default	Related to the model.
	Setting range	0.00Hz ～ maximum frequency	
F8.06	Multistage frequency 6	Default	Related to the model.
	Setting range	0.00Hz ～ maximum frequency	
F8.07	Multistage frequency 7	Default	Related to the model.
	Setting range	0.00Hz ～ maximum frequency	

No matter how many F0.02 (main frequency instruction selection) is set, multistage frequency operation has the highest priority. When F4.03 = 56, F4.04 = 57 and F4.05 = 58 are valid, to see the following table:

X5(58)	X4(57)	X3(56)	Multistage frequency setting	Corresponding parameters
OFF	OFF	OFF	Multistage frequency invalid	F0.02 frequency input channel setting
OFF	OFF	ON	Multistage frequency1	F8.01
OFF	ON	OFF	Multistage frequency2	F8.02
OFF	ON	ON	Multistage frequency3	F8.03
ON	OFF	OFF	Multistage frequency4	F8.04
ON	OFF	ON	Multistage frequency5	F8.05
ON	ON	OFF	Multistage frequency6	F8.06

X5(58)	X4(57)	X3(56)	Multistage frequency setting	Corresponding parameters
ON	ON	ON	Multistage frequency7	F8.07

F8.16	Acceleration time 2	Default	Type dependant
	Setting range	0.0s～6500.0s	
F8.17	Deceleration time 2	Default	Type dependant
	Setting range	0.0s～6500.0s	
F8.18	Acceleration time 3	Default	Type dependant
	Setting range	0.0s～6500.0s	
F8.19	Deceleration time 3	Default	Type dependant
	Setting range	0.0s～6500.0s	
F8.20	Acceleration time 4	Default	Type dependant
	Setting range	0.0s～6500.0s	
F8.21	Deceleration time 4	Default	Type dependant
	Setting range	0.0s～6500.0s	

T510 provides four groups of acceleration and deceleration time, respectively F0.21, F0.22 and the above three groups of acceleration and deceleration time.

The definitions of acceleration and deceleration time of the four groups are identical, please refer to the relevant instructions of F0.21 and F0.22.

Four groups of acceleration and deceleration time can be switched through different combinations of multi-functional digital input terminal X. For specific usage, please refer to the relevant instructions of function codes F4.01-F4.07.

F8.22	Jump frequency 1	Default	0.00Hz
	Setting range	0.00Hz～maximum frequency	
F8.23	Jump frequency 2	Default	0.00Hz
	Setting range	0.00Hz～maximum frequency	
F8.24	Jump frequency amplitude	Default	0.00Hz
	Setting range	0.00Hz～maximum frequency	

When the set frequency is within the jump frequency range, the actual operating frequency will run at the jump frequency close to the set frequency. By setting the jump frequency, the frequency converter can avoid the mechanical resonance point of the load.

T510 can set two jump frequency points. If both jump frequencies are set to 0, the function of jump frequency will be cancelled. The principle of jump frequency and jump frequency amplitude is illustrated in Figure 6-20.

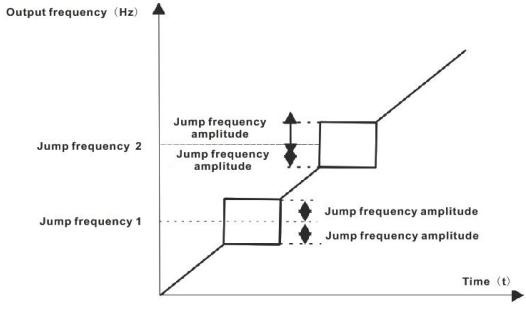

Figure 6-20 Illustration of jump frequency

F8.25	Droop control	Factory default	0.00Hz
	Setting range	0.00Hz～10.00Hz	

This function is generally used for load distribution when multiple motors drive the same load.

Drop control means that the output frequency of frequency converter decreases with the increase of load, so that when multiple motors drive the same load, the output frequency of the motor with heavy load decreases more, so that the load of the motor can be reduced and the load of multiple motors can be evenly distributed.

F8.26	Cooling fan control	Default	0
	Setting range	0:Running fan 1: The fan is running all the time.	

Used to select the action mode of the radiator fan. When the frequency converter is selected to be 0, the fan runs in the running state. If the temperature of the radiator is higher than 40

degrees in the shutdown state, the fan runs. When the radiator is lower than 40 degrees in the shutdown state, the fan does not work.

When the selection is 1, the fan runs all the time after the power is turned on.

F8.27	Setting cumulative power-on arrival time	Default	0 hour
	Setting range	0h～65000h	

This parameter refers to the frequency drop value of the frequency converter when it outputs rated load.

When the cumulative power-on time (F7.28) reaches the power-on time set by F8.27, the multi-functional digital Y output ON signal of the frequency converter.

F8.28	Setting cumulative running arrival time	Default	0 hour
	Setting range	0h～65000h	

Used to set the running time of the frequency converter.

When the accumulated running time (F7.27) reaches the set running time, the multi-functional digital Y output ON signal.

F8.29	Jump frequency valid or invalid in acceleration and deceleration	Default	0
	Setting range	0:invalid 1:valid	

The function code is used to set whether the jump frequency is valid or invalid during acceleration and deceleration.

When set to be valid, when the operating frequency is within the hopping frequency range, the actual operating frequency will skip the set hopping frequency boundary.

F8.30	Acceleration time 1 and acceleration time 2 switch frequency point	Default	0.00Hz
	Setting range	0.00Hz～maximum frequency	
F8.31	Acceleration time 1 and acceleration time 2 switch frequency point	Factory default	0.00Hz
	Setting range	0.00Hz～maximum frequency	

This function is effective when the motor is selected as motor 1 and the acceleration and deceleration time is not selected through X terminal switching. It is used to select different

acceleration and deceleration time according to the operating frequency range instead of X terminal.

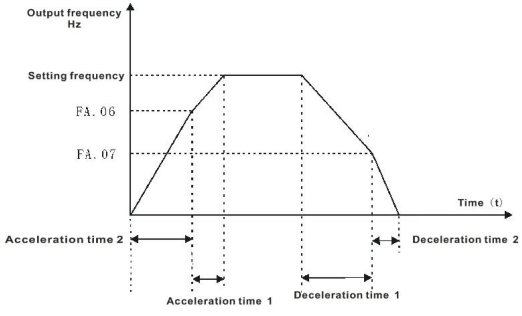

Figure 6-21 Acceleration and deceleration time switching diagram

In the acceleration process, if the operating frequency is less than F8.30, the acceleration time is 2; if the operating frequency is greater than F8.30, the acceleration time is 1.

In the process of deceleration, if the operation frequency is greater than F8.31, deceleration time 1 is chosen, and if the operation frequency is less than F8.31, deceleration time 2 is chosen.

F8.32	Timing function selection		Default	0
	Setting range	0	Invalid	
		1	Valid	

F8.33	Timing runtime selection		Default	0
	Setting range	0	F8.34 Setting	
		1	AI1	
		2	AI2	
		3	Panel potentiometer	
		Analog input range 100% corresponding to F8.34		
F8.34	Timing running time		Default	0.0Min

	Setting range	0.0Min～6500.0Min

This set of parameters is used to complete the function of timing operation of frequency converter.

When the timing function of F8.32 is selected effectively, the frequency converter starts timing when it starts. When it reaches the set timing running time, the frequency converter stops automatically and multi-functional Y outputs ON signal.

Every time the converter starts, it starts timing from 0. The remaining running time of the timing can be viewed through L0.20.

The timing running time is set by F8.33 and F8.34, in minutes.

F8.35	This operation arrival time	Default	0.0 min
	Setting range	0.0 min～6500.0 min	

When the running time of this start-up reaches this time, the multi-functional digital Y-converter outputs the ON signal of "this running time arrives".

F8.38	DPWM switching upper limit frequency	Default	12.00Hz
	Setting range	0.00Hz～15Hz	

Only V/F control is effective.

Asynchronous V/F operation mode is determined, below this value is 7-segment continuous modulation mode, on the contrary, 5-segment intermittent modulation mode.

Refer to function code F6.11 for V/F operation instability and function code for converter loss and temperature rise.

F8.39	PWM modulation mode		Default	0
	Setting range	0	Asynchronous modulation	
		1	Synchronous modulation	

Only V/F control is effective.

Synchronized modulation means that the carrier frequency varies linearly with the output frequency transformation to ensure that the ratio of the two (carrier ratio) remains unchanged. It is generally used when the output frequency is high, which is conducive to the quality of the output voltage.

When the output frequency is lower (below 100Hz), synchronous modulation is generally not needed, because the ratio of carrier frequency to output frequency is higher, and the advantage of asynchronous modulation is more obvious.

Synchronized modulation takes effect only when the operating frequency is higher than 85Hz. The frequency below this frequency is fixed as asynchronous modulation mode.

F8.44	SVC optimization mode selection		Default	1
	Setting range	0	No optimization	
		1	Optimization mode 1	
		2	Optimization mode 1	

Optimization mode 1: Use when the linearity of torque control is high

Optimized Mode 2: Use when required for high-speed stationarity

Group F9 Closed-loop PID and constant pressure water supply specific parameters

F9.00	PID given source		Default	0
	Setting range	0	F9.01 Setting	
		1	AI1	
		2	AI2	
		3	Panel potentiometer	
		4	PULSE pulse (X5)	
		5	Communication	
		6	Multistage closed-loop given	
F9.01	PID value given		Factory default	0.200
	Setting range		0.000～F9.04 (Mpa)	

This parameter is used to select the given channel of process PID target quantity.

The setting target of process PID is relative value, and the setting range is 0.0%-100.0%.

Similarly, the feedback of PID is relative, and the function of PID is to make the two relative quantities the same.

F9.02	PID Feedback source		Default	0
	Setting range	0	AI1	
		1	AI2	
		2	Panel potentiometer	
		3	AI1－AI2	
		4	PULSE pulse (X5)	

		5	Communication
		6	AI1+AI2
		7	MAX（|AI1|，|AI2|）
		8	MIN（|AI1|，|AI2|）

This parameter is used to select the feedback signal channel of process PID.

The feedback of process PID is also relative, and the setting range is 0.0%-100.0%.

F9.03	PID action direction		Default	0
	Setting range	0	Positive effect	
		1	Reaction	

Positive effect: When the feedback signal of PID is less than a given quantity, the output frequency of the converter rises. For example, tension control in winding.

Reaction: When the feedback signal of PID is less than a given quantity, the output frequency of the converter decreases. Such as tension control occasion of unwinding. This function is affected by the reversal of the direction of action (function 35) of the multi-functional terminal PID, which should be paid attention to in use.

F9.04	PID given feedback range (remote pressure gauge range for water supply)	Default	1.00
	Setting range	0.00～655.35	

The given feedback range of PID is dimensionless unit. When constant pressure water supply is provided, the dimension unit is 0.01 Mpa. It is used for the given display of PID L0.15 and the feedback display of PID L0.16.

The relative value of the given feedback of the PID is 100.0%, corresponding to the given feedback range F9.04. For example, if F9.04 is set to 1.60 Mpa, when the PID is given 100.0%, the PID is given to display L0.15 to 1.60 Mpa.

F9.05	Proportional gain KP1	Default	35.0
	Setting range	0.0～100.0	
F9.06	Integral time Til	Default	0.50s
	Setting range	0.01s～10.00s	
F9.07	Differential time Td1	Default	0.000s
	Setting range	0.00～10.000	

Proportional gain KP1:

The greater the KP1, the greater the adjustment intensity of the whole PID regulator. The parameter 100.0 indicates that when the deviation between the PID feedback and the given quantity is 100.0%, the adjusting range of the output frequency instruction of the PID regulator is the maximum frequency.

Integral time Ti1:

The intensity of integral adjustment of PID regulator is determined. The shorter the integration time, the greater the adjustment intensity. Integration time refers to the time when the deviation between the PID feedback and the given quantity is 100.0%, the integrator adjusts continuously, and the adjustment amount reaches the maximum frequency.

Differential time Td1:

Determine the intensity of the adjustment of the deviation rate by the PID regulator. The longer the differential time is, the greater the adjustment intensity is. Differential time refers to the maximum frequency of the differential regulator when the feedback varies by 100.0% in that time.

F9.08	PID reverse cut-off frequency	Default	0.00Hz
	Setting range	0．00～maximum frequency	

In some cases, only when the output frequency of the PID is negative (i.e. inversion of the frequency converter), can the PID control the given quantity and the feedback quantity to the same state. However, too high inversion frequency is not allowed for some occasions. F9.08 is used to determine the upper limit of inversion frequency.

F9.09	PID deviation limit	Default	0.01%
	Setting range	0.0%～100.0%	

When the deviation between the given value of PID and the feedback value is less than F9.09, the PID stops adjusting. In this way, the output frequency is stable when the deviation between the given and the feedback is small, which is very effective in some closed-loop control situations.

F9.10	PID differential limit	Default	0.10%
	Setting range	0．00%～100.00%	

In the PID regulator, the function of differential is sensitive and easy to cause system oscillation. For this reason, the function of PID differential is generally limited to a small range. F9.10 is used to set the range of PID differential output.

F9.11	PID given change time	Default	0.00s
	Setting range	0.00s～650.00s	

The given change time of PID refers to the time required for the given value of PID to change from 0.0% to 100.0%.

When the given change of the PID occurs, the given value of the PID changes linearly according to the given change time, which reduces the adverse effect of the given sudden change on the system.

F9.12	PID feedback filtering time	Default	0.00s
	Setting range	0.00s～60.00s	
F9.13	PID output filtering time	Default	0.00s
	Setting range	0.00s～60.00s	

F9.12 is used to filter the feedback of PID. This filter can reduce the influence of disturbance on the feedback, but it will lead to the decline of the response performance of the closed-loop system.

F9.13 is used to filter the output frequency of PID. This filter will reduce the sudden change of the output frequency of the converter, but it will also lead to the decline of the response performance of the closed-loop system.

F9.15	Proportional gain KP2		Default	20.0
	Setting range		0.0～100.0	
F9.16	Integral time Ti2		Default	2.00s
	Setting range		0.01s～10.00s	
F9.17	Differential time Td 2		Default	0.000s
	Setting range		0.00～10.000	
F9.18	PID parameters switching conditions		Default	0
	Setting range	0	No switchover	

		1	Switching through X-terminal	
		2	Automatic switching according to deviation	
F9.19	PID parameter switching deviation 1		Default	20.0%
	Setting range		0.0%～F9.20	
F9.20	PID parameter switching deviation2		Default	80.0%
	Setting range		F9.19～100.0%	

In some applications, a set of PID parameters can not meet the needs of the whole operation process, and different PID parameters are needed under different conditions.

This set of function codes is used for switching two sets of PID parameters. The setting mode of regulator parameters F9.15-F9.16 is similar to that of parameters F9.05-F9.06.

Two sets of PID parameters can be switched by multi-functional digital X terminal, or automatically according to the deviation of the PID.

When choosing multi-functional X terminal to switch, the function selection of multi-functional terminal should be set to 43 (PID parameter switch terminal). When the terminal is invalid, the parameter group 1 (F9.05-F9.06) and the parameter group 2 (F9.15-F9.16) should be selected when the terminal is valid.

When the absolute deviation between the given and feedback is less than the deviation of the switching of the PID parameters 1 F9.19, the parameter group 1 of the PID parameters is selected. When the absolute deviation between the given deviation and the feedback is greater than the deviation of the PID switching 1 F9.20, the parameter group 2 of the PID is selected. Given that the deviation between feedback and switching deviation is between switching deviation 1 and switching deviation 2, the PID parameters are linear interpolation of two sets of PID parameters.

F9.21	PID initial value	Default	0.0%
	Setting range	0.0%～100.0%	
F9.22	PID initial value holding time	Default	0.00s
	Setting range	0.00s～650.00s	

When the frequency converter starts, the output of the PID is fixed to the initial value F9.21 of the PID. After the initial value of the continuous PID is maintained for F9.22, the closed-loop adjusting operation of the PID is started.

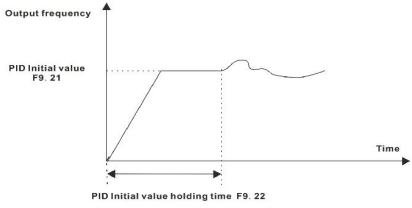

Fig. 6-22 functional diagram of PID initial value.

F9.23	Two output deviations forward maximum	Default	1.00%
	Setting range	0.00%～100.00%	
F9.24	Two output deviations reverse maximum	Default	1.00%
	Setting range	0.00%～100.00%	

This function is used to limit the difference between two beats (2ms/beat) of PID output, so as to restrain the excessive change of PID output and make the frequency converter run stably. F9.23 and F9.24 correspond to each other, and the maximum absolute value of output deviation in forward and reverse directions is obtained.

F9.25	PID integral attribute		Default	00
	Setting range	Unit's digit	Integral separation	
		0	Invalid	
		1	Valid	
		Ten's digit	Whether if output to limit value integral stop	
		0	Continue integral	
		1	Stop integral	

Integral separation:

If the integral separation is effective, when the multi-functional digital X-integral pause (function 22) is effective, the integral PID integral of the PID stops operation, and the PID only has proportional and differential effects.

When the choice of integral separation is invalid, the integral separation is invalid whether the multi-functional digital X is valid or not.

Whether if the integral stop after the output to the limit value

When the output of PID arithmetic reaches the maximum or minimum value, you can choose whether to stop the integral action. If the stopping integral is chosen, then the calculation of the PID integral stops at this time, which may help to reduce the overshoot of the PID.

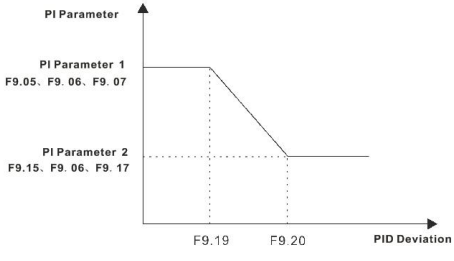

Figure 6-23 PID parameter switchover

F9.26	PID feedback loss detection value	Default	0.0%
	Setting range	0.0%: no detection feedback loss in 0.1%-100.0%	
F9.27	PID feedback loss detection time	Default	1.0s
	Setting range	0.0s～20.0s	

This function code is used to judge whether the PID feedback is lost. It is often used to detect the broken line of remote pressure gauge for constant pressure water supply.

When the PID feedback is less than the feedback loss detection value F9.26 and the duration exceeds F9.27, the frequency converter alarms the fault E031 and processes it according to the selected fault handling method (Fb.15).

F9.28	PID shut down operation		Default	0
	Setting range	0	Shut down no operation	
		1	Shut-down operation	

Used to select whether the PID continues to operate when the PID stops. In general applications, the operation of PID should be stopped when the machine is down.

F9.36	Recovery coefficient	Default	75.0%
	Setting range	0.0%～100.0% (Given pressure percentage relative to the target)	
F9.37	Recovery delay time	Default	0.0s
	Setting range	0.0s～6500.0s	
F9.38	Sleep frequency	Default	38.00Hz
	Setting range	0.00Hz～maximum frequency	
F9.39	Sleep delay time	Default	0.0s
	Setting range	0.0s～6500.0s	

Sleep function: When the feedback pressure of water supply plus the tolerance value of F9.40 sleep is greater than or equal to the given pressure, and the frequency of the frequency converter is less than or equal to F9.38 (sleep frequency). After F9.39 (sleep delay time), the frequency converter will enter the sleep state, and the frequency converter will stop to save energy and protect the motor. . In the course of sleep delay, if the frequency exceeds the set value of F9.38, the sleep delay time is zero and the time is recalculated.

Recovery function: When the system is in sleep state, when the feedback pressure of water supply is less than or equal to the recovery coefficient multiplied by the given pressure value (F9.36 * F9.01), after the recovery delay time (F9.37), the system withdraws from sleep state and the frequency converter runs.

F9.40	Sleep tolerance	Default	20.0%
	Setting range	0.0%～100.0% (relative to the target given pressure)	

F9.40 is the percentage of the given pressure relative to the target, as specified in the parameters F9.38 and F9.39.

F9.41	Keyboard UP/DOWN in closed-loop PID monitoring mode function selection	Default	1
	Setting range	0～1	

In the closed-loop PID mode, this function is effective, if not in the closed-loop PID mode, this function code is invalid.

0: Keyboard frequency is set to adjust

1:PID digital setting adjustment

F9.42	Constant pressure water supply mode selection	Default	0
	Setting range	0～2	

0: One-drag multi-constant-pressure water supply mode is invalid

1: Select expansion card as one-tow-two water supply mode, one-use-one-stand-by water supply mode, and control two pumps through control board terminals Y1-COM and Y2-COM.

2: It is effective to choose the constant pressure water supply mode of one-drag-two cycle with expansion card, one-one-supplement water supply mode, one-drag-two water supply card and one-drag-two cycle water supply mode.

F9.43	Timing rotation interval	Default	0
	Setting range	0-65535 minutes 0 indicates invalid timing rotation	

By setting this parameter, the anti-rust function of the motor can be realized. When one or more pumps do not enter the running state for a long time, the frequency converter will automatically switch the running pump and the static pump through this delay time.

When the setting value is 0 minutes, the automatic switch is invalid.

F9.44	Detection time of pumping	Default	5.0s
	Setting range	0.0～6553.5s	

When the output frequency of the converter has reached the upper limit frequency, the pressure still does not meet the requirements and needs to be pumped, the converter will perform pumping action after this detection time.

F9.45	Detection time of pump reduction	Default	3.0s
	Setting range	0.0～6553.5s	

When the output frequency of the frequency converter has reached the lower limit frequency, the pressure still does not meet the requirements of pump reduction processing, the frequency converter will perform pump reduction action after this detection time.

F9.46	Electromagnetic switch delay time	Default	0.5s
	Setting range	0.0～10.0s	

This function defines the delay time of electromagnetic switch operation when switching from power frequency to frequency conversion or from frequency conversion to power frequency.

F9.47	Frequency converter pumping delay time	Default	1.0s
	Setting range	0.1～20.0s	

This function defines the delay time of frequency converter input when the water supply PID closed-loop is valid, at the beginning of operation or when the power frequency conversion, to prevent the frequency converter from entering too fast and causing overcurrent.

F9.52	Water supply B1 output function（B1-RCM）	Default	0
	Setting range	0～1	

0: The water supply mode is invalid. As an ordinary output, please see the function settings of F4.32.

1:B1-RCM, effective in water supply mode, F9.42=1 or 2, the first pump frequency conversion.

F9.53	Water supply G1 output function	Default	0
	Setting range	0～1	

0: The water supply mode is invalid. As an ordinary output, please see the function settings of F4.33.

1:G1-RCM, water supply mode is effective, F9.42=2, the first pump power frequency.

F9.54	Water supply B2 output function	Default	0
	Setting range	0～1	

0: The water supply mode is invalid. As an ordinary output, please see the function settings of F4.34.

1:B2-RCM, effective in water supply mode, F9.42=1 or 2, the second pump frequency conversion.

F9.55	Water supply G2 output function	Default	0
	Setting range	0～1	

0: The water supply mode is invalid. As an ordinary output, please see the function settings of F4.29.

1:G2-RCM, water supply mode is effective, F9.42=2, the second pump power frequency.

Group FA Swing frequency, multistage instruction, simple PLC function parameter unit

FA.00	Multistage instructions0	Default	0.0%
	Setting range	-100.0%～100.0%	
FA.01	Multistage instructions1	Default	0.0%
	Setting range	-100.0%～100.0%	
FA.02	Multistage instructions2	Default	0.0%
	Setting range	-100.0%～100.0%	
FA.03	Multistage instructions3	Default	0.0%
	Setting range	-100.0%～100.0%	
FA.04	Multistage instructions4	Default	0.0%
	Setting range	-100.0%～100.0%	
FA.05	Multistage instructions5	Default	0.0%
	Setting range	-100.0%～100.0%	
FA.06	Multistage instructions6	Default	0.0%
	Setting range	-100.0%～100.0%	
FA.07	Multistage instructions7	Default	0.0%
	Setting range	-100.0%～100.0%	
FA.08	Multistage instructions8	Default	0.0%
	Setting range	-100.0%～100.0%	
FA.09	Multistage instructions9	Default	0.0%
	Setting range	-100.0%～100.0%	
FA.10	Multistage instructions10	Default	0.0Hz
	Setting range	-100.0%～100.0%	
FA.11	Multistage instructions11	Default	0.0%
	Setting range	-100.0%～100.0%	
FA.12	Multistage instructions12	Default	0.0%

	Setting range	-100.0%～100.0%	
FA.13	Multistage instructions13	Default	0.0%
	Setting range	-100.0%～100.0%	
FA.14	Multistage instructions14	Default	0.0%
	Setting range	-100.0%～100.0%	
FA.15	Multistage instructions15	Default	0.0%
	Setting range	-100.0%～100.0%	

Multistage instructions can be used in three situations: as frequency instructions, as voltage source of VF separation, and as setting source of process PID.

In three applications, the dimension of multistage instruction is relative value, ranging from -100.0% to 100.0%, which is the percentage of relative maximum frequency when used as frequency instruction; when used as VF separation voltage source, it is the percentage relative to rated voltage of motor; and since the given value of PID is original relative value, multistage instruction is not needed as a set source of PID. Dimensional conversion.

Multistage instructions need to be switched according to the different states of multistage digital X. Refer to group F4 specifically.

FA.16	Multistage instruction 0 given mode		Default	0
	Setting range	0	Function code FA.00 given	
		1	AI1	
		2	AI2	
		3	Panel potentiometer	
		4	PULSE pulse	
		5	PID	
		6	The preset frequency (F0.09) given, UP/DOWN can be modified.	

This parameter determines the given channel of multistage instruction 0.

In addition to FA.00, multistage instruction 0 has many other options to facilitate switching between short instructions and other given modes. When multiple instructions are used as frequency instructions or simple PLC is used as frequency instructions, it is easy to switch between two kinds of frequency instructions.

FA.17	Simple PLC operation mode		Default	0
	Setting range	0	Shutdown at the end of a single run	

		1	Keep the final value at the end of a single run
		2	Continuous cycle

Simple PLC functions have two actions: as a frequency instruction or as a voltage source for V/F separation.

Figure 6-24 is a schematic diagram of a simple PLC as a frequency instruction. When simple PLC is used as frequency instruction, the positive and negative values of FA.00-FA.16 determine the direction of operation. If negative values indicate that the converters operate in the opposite direction as frequency instruction, PLC has three operation modes, which are not used when V/F separates voltage sources. Such as:

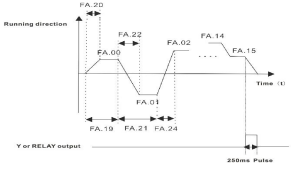

Figure 6-24 Simple PLC diagram

0: Stop at the end of single run

Frequency converter can stop automatically after a single cycle, and it needs to give the operation command again to start.

1: Keep the final value at the end of a single run

After the frequency converter completes a single cycle, the frequency and direction of the last section are automatically maintained.

2: Continuous cycle

After the frequency converter completes a cycle, it automatically starts the next cycle until it stops when there is a stop command.

FA.18	Simple PLC power-off memory selection		Default	00
	Setting range	Unit's digit	Power-off memory selection	
		0	Power-off no memory	
		1	Power-off memory	
		Ten's digit	Shutdown memory selection	

		0	Shutdown no memory
		1	Shutdown memory

PLC power-off memory refers to the memory of the operation stage and frequency of PLC before power-off, and continues to run from the memory stage when the next power-on. If you choose not to remember, you will start the PLC process again every time you turn on the power.

The memory of PLC downtime is to record the running stage and frequency of the previous PLC when it is downtime, and continue to run from the memory stage when it is next running. If you choose not to remember, the PLC process will be restarted every time you start.

FA.19	Simple PLC section 0 running time	Default	0.0s（h）
	Setting range	0.0s（h）～6553.5s（h）	
FA.20	Simple PLC section 0 acceleration and deceleration running time	Default	0
	Setting range	0～3	
FA.21	Simple PLC section 1 running time	Default	0.0s（h）
	Setting range	0.0s（h）～6553.5s（h）	
FA.22	Simple PLC section 1 acceleration and deceleration running time	Default	0
	Setting range	0～3	
FA.23	Simple PLC section 2 running time	Default	0.0s（h）
	Setting range	0.0s（h）～6553.5s（h）	
FA.24	Simple PLC section 2 acceleration and deceleration running time	Default	0
	Setting range	0～3	
FA.25	Simple PLC section 3 running time	Default	0.0s（h）
	Setting range	0.0s（h）～6553.5s（h）	
FA.26	Simple PLC section 3 acceleration and deceleration running time	Default	0
	Setting range	0～3	
FA.27	Simple PLC section 4 running time	Default	0.0s（h）
	Setting range	0.0s（h）～6553.5s（h）	
FA.28	Simple PLC section 4 acceleration and deceleration running time	Default	0
	Setting range	0～3	
FA.29	Simple PLC section 5 running time	Default	0.0s（h）
	Setting range	0.0s（h）～6553.5s（h）	
FA.30	Simple PLC section 5 acceleration	Default	0

	and deceleration running time		
	Setting range	0～3	
FA.31	Simple PLC section 6 running time	Default	0.0s（h）
	Setting range	0.0s（h）～6553.5s（h）	
FA.32	Simple PLC section 6 acceleration and deceleration running time	Default	0
	Setting range	0～3	
FA.33	Simple PLC section 7 running time	Default	0.0s（h）
	Setting range	0.0s（h）～6553.5s（h）	
FA.34	Simple PLC section 7 acceleration and deceleration running time	Default	0
	Setting range	0～3	
FA.35	Simple PLC section 8 running time	Default	0.0s（h）
	Setting range	0.0s（h）～6553.5s（h）	
FA.36	Simple PLC section 8 acceleration and deceleration running time	Default	0
	Setting range	0～3	
FA.37	Simple PLC section 9 running time	Default	0.0s（h）
	Setting range	0.0s（h）～6553.5s（h）	
FA.38	Simple PLC section 9 acceleration and deceleration running time	Default	0
	Setting range	0～3	
FA.39	Simple PLC section 10 running time	Default	0.0s（h）
	Setting range	0.0s（h）～6553.5s（h）	
FA.40	Simple PLC section 10 acceleration and deceleration running time	Default	0
	Setting range	0～3	
FA.41	Simple PLC section 11 running time	Default	0.0s（h）
	Setting range	0.0s（h）～6553.5s（h）	
FA.42	Simple PLC section 11 acceleration and deceleration running time	Default	0
	Setting range	0～3	
FA.43	Simple PLC section 12 running time	Default	0.0s（h）
	Setting range	0.0s（h）～6553.5s（h）	
FA.44	Simple PLC section 12 acceleration and deceleration running time	Default	0
	Setting range	0～3	
FA.45	Simple PLC section 13 running time	Default	0.0s（h）

	Setting range	0.0s（h）～6553.5s（h）	
FA.46	Simple PLC section 13 acceleration and deceleration running time	Default	0
	Setting range	0～3	
FA.47	Simple PLC section 14 running time	Default	0.0s（h）
	Setting range	0.0s（h）～6553.5s（h）	
FA.48	Simple PLC section 14 acceleration and deceleration running time	Default	0
	Setting range	0～3	
FA.49	Simple PLC section 15 running time	Default	0.0s（h）
	Setting range	0.0s（h）～6553.5s（h）	
FA.50	Simple PLC section 15 acceleration and deceleration running time	Default	0
	Setting range	0～3	
FA.51	Simple PLC running time unit	Default	0
	Setting range	0	S(second)
		1	H(hour)
FA.52	Swing setting mode	Default	0
	Setting range	0	Relative to central frequency
		1	Relative to maximum frequency

This parameter is used to determine the reference value of the swing.

0: The relative center frequency (F0.04 frequency instruction) is a variable swing system. The swing amplitude varies with the center frequency (set frequency).

1: Relative maximum frequency, fixed swing system, fixed swing.

FA.53	Swing frequency amplitude	Default	0.0%
	Setting range	0.0%～100.0%	
FA.54	Sudden jump frequency and amplitude	Default	0.0%
	Setting range	0.0%～50.0%	

Through this parameter, the swing amplitude and jump frequency can be determined.

When setting the swing relative to the center frequency (FA. 52 = 0), the swing AW = the frequency instruction F0. 04 * the swing amplitude FA. 53.

When setting the amplitude relative to the maximum frequency (FA. 52 = 1), the amplitude AW = the maximum frequency * the amplitude FA. 53.

When the sudden jump frequency amplitude is swing frequency, the percentage of sudden jump frequency relative to swing amplitude is: sudden frequency = swing AW * sudden jump

FA.55	Swing frequency period	Default	10.0s
	Setting range	0.0s～3000.0s	
FA.56	Triangular wave rising time coefficient	Default	50.0%
	Setting range	0.0%～100.0%	

frequency amplitude FA.54. If the swing amplitude is selected relative to the center frequency (FA. 52 = 0), the sudden frequency is a change value. If the swing amplitude is selected relative to the maximum frequency (FA.52=1), the sudden frequency is a fixed value.

The operation frequency of swing frequency is constrained by the upper limit frequency and the lower limit frequency.

Pendulum frequency period: the time value of a complete pendulum frequency period.

The rise time coefficient of triangular wave FA.56 is the percentage of the rise time of triangular wave relative to the swing frequency period FA.55. The rising time of triangular wave is equal to the period of pendulum frequency FA.55 * the rising time coefficient of triangular wave FA.56 in seconds.

Triangular wave descent time = pendulum frequency period FA.55 * (1-trigonometric wave ascent time coefficient FA.56), in seconds.

FA.57	Setting length	Default	1000m
	Setting range	0m～65535m	
FA.58	Actual length	Default	0m
	Setting range	0m～65535m	
FA.59	Per meter pulse number	Default	100.0
	Setting range	0.1～6553.5	

The function codes mentioned above are used for fixed length control.

Length information needs to be collected by multi-functional digital input terminals. The number of pulses sampled by terminals is divided by the number of pulses per meter FA.59, and the actual length FA.58 can be calculated. When the actual length is larger than the set length FA.57, the multi-functional digital Y outputs the "Length to Arrive" ON signal.

In the process of fixed length control, the length reset operation can be carried out through multi-functional X terminal (X function selection is 28). Please refer to F4.01-F4.07 specifically.

It is necessary to set the corresponding input terminal function as "length counting input" (function 27). When the pulse frequency is high, X5 port must be used.

FA.60	Setting count value	Default	1000
	Setting range	1～65535	
FA.61	Specified count value	Default	1000
	Setting range	1～65535	

The counting value needs to be collected through a multi-functional digital input terminal. In application, the corresponding input terminal function should be set as "counter input" (function 25). When the pulse frequency is high, X5 port must be used.

When the count value reaches the set count value FA.60, the multi-function digital Y outputs the ON signal of "set count value arrives", and then the counter stops counting.

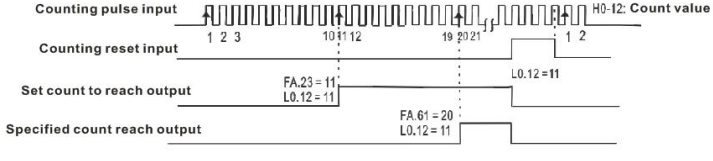

Figure 6-25 Diagram of setting count value given and specified count value given

When the count value reaches the specified count value FA.61, the multi-functional digital Y outputs the ON signal of "the specified count value arrives", at which time the counter continues to count until the counter stops when the "set count value" is reached.

The specified count value FA.61 should not be greater than the set count value FA.60. Figure 6-25 is a schematic diagram of the function of setting the arrival of the count value and the arrival of the specified count value.

Fb Fault and Protection

Fb.00	Motor overload protection selection		Default	1
	Setting range	0	Prohibit	
		1	Permit	
Fb.01	Motor overload protection gain		Default	1.00
	Setting range		0.20～10.00	

Fb.00=0: No motor overload protection function, there may be the risk of motor overheating damage, it is recommended that the frequency converter and motor heating relay;

Fb.00 = 1: At this time, the frequency converter judges whether the motor is overloaded or not according to the inverse time-limit curve of motor overload protection.

Fb.01 = overload multiple * overload time / 2.2 (overload time: minutes)

Example: When the motor operates at rated current of 1.5 times, the frequency converter 1 is required to report the motor overload fault within one minute, then Fb.01=1.5*1/2.2=0.68.

Users need to set the value of Fb.01 correctly according to the actual overload capacity of the motor. If the parameter is too large, it will easily lead to overheating damage of the motor and the risk that the frequency converter will not alarm!

Fb.02	Motor overload pre- warning coefficient	Default	80%
	Setting range	50%～100%	

This function is used to give an pre- warning signal to the control system through Y before motor overload fault protection. The pre- warning coefficient is used to determine the degree of early warning before motor overload protection. The larger the value, the smaller the early warning.

When the cumulative output current of the converter is greater than the product of the overload inverse time-limit curve and Fb.01, the multi-functional digital Y of the converter outputs the ON signal of "motor overload forecasting alarm".

Fb.03	Overvoltage stall gain	Default	0
	Setting range	0 (no overvoltage stall) - 100	
Fb.04	Overvoltage stall protection voltage	Default	130%
	Setting range	120%～150%	

During the deceleration process of the converter, when the DC bus voltage exceeds the overvoltage stall protection voltage, the deceleration of the converter stops and remains at the current operating frequency, and continues to decelerate after the bus voltage drops.

Overvoltage stall gain is used to adjust the ability of frequency converter to suppress overvoltage during deceleration. The greater the value, the stronger the ability to suppress overvoltage. Without overvoltage, the smaller the gain setting, the better.

For small inertia load, the over-voltage stall gain should be small, otherwise the dynamic response of the system will be slow. For large inertia load, this value should be large, otherwise the suppression effect is not good and overvoltage fault may occur.

When the over-voltage stall gain is set to zero, the over-voltage stall function is cancelled.

The base value of 100% overvoltage stall protection voltage is as follows:

Voltage level	Base voltage value of overvoltage stall protection
Single phase 220V	290V
Three phase 220V	290V
Three phase 380V	530V

Fb.05	Overcurrent stall gain	Default	10
	Setting range	0～100	

Fb.06	Overcurrent stall protection current	Default	150%
	Setting range	100%～200%	

Overcurrent stall: when the output current of the converter reaches the set overcurrent stall protection current (Fb.06), the output frequency of the converter decreases when it accelerates;

when it runs at a constant speed, the output frequency decreases; and when it slows down, it slows down until the current is less than the overcurrent stall protection current (Fb.06), The operating frequency will return to normal. See Figure 6-26 for details.

Over-current stall protection current: Select the current protection point of over-current stall function. Over this parameter, the frequency converter starts to perform the over-current stall protection function. This value is the percentage of the rated current relative to the motor.

Over-loss speed gain: Used to adjust the ability of frequency converter to suppress over-current in acceleration and deceleration process. The larger the value, the stronger the ability to restrain overcurrent. Without overcurrent, the smaller the gain setting, the better. For small inertia load, the over-loss speed gain should be small, otherwise the dynamic response of the system will be slow. For large inertia load, this value should be large, otherwise the suppression effect is not good, and overcurrent fault may occur. In the case of very small inertia, it is recommended to set the overcurrent suppression gain to less than 20. When the over-loss speed gain is set to 0, the function of over-loss speed is cancelled.

Overcurrent stall: When the output current of the converter reaches the set overcurrent stall protection current (Fb.06), the output frequency of the converter decreases when it accelerates; when it runs at a constant speed, the output frequency decreases; and when it slows down, it slows down until the current is less than the overcurrent stall protection current (Fb.06), The operating frequency will return to normal. See Figure 6-26 for details.

Over-current stall protection current: Select the current protection point of over-current stall function. Over this parameter, the frequency converter starts to perform the over-current stall protection function. This value is the percentage of the rated current relative to the motor.

Over-loss speed gain: Used to adjust the ability of frequency converter to suppress over-current in acceleration and deceleration process. The larger the value, the stronger the ability to restrain overcurrent. Without overcurrent, the smaller the gain setting, the better. For small inertia load, the over-loss speed gain should be small, otherwise the dynamic response of the system will be slow. For large inertia load, this value should be large, otherwise the suppression effect is not good, and overcurrent fault may occur. In the case of

very small inertia, it is recommended to set the overcurrent suppression gain to less than 20. When the over-loss speed gain is set to 0, the function of over-loss speed is cancelled.

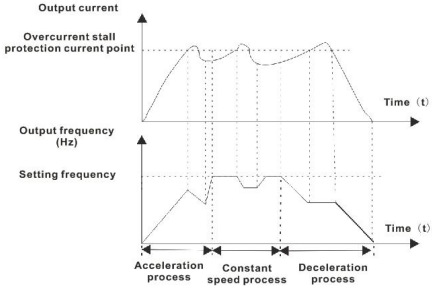

Figure 6-26 Diagram of overcurrent stall protection

Fb.07	Selection of short circuit protection from power-on to ground	Default	0
	Setting range	0	Invalid
		1	Valid

The frequency converter can be selected to detect whether the motor is short-circuit to the ground when it is on power. If this function is effective, the UVW terminal of the frequency converter will have a voltage output within a period of time after power-on.

Fb.08	Faults auto reset times	Default	0
	Setting range	0～20	

When the frequency converter chooses to reset automatically, it is used to set the number of times that can be reset automatically. After exceeding this number, the frequency converter remains in a failure state.

Fb.09	Y-action selection of output terminal during faults auto reset	Default	0
	Setting range	0: No action 1: Action	

If the converter has the function of automatic fault reset, during the period of automatic fault reset, whether the fault Y acts or not can be set through Fb.09.

Fb.10	Fault auto reset interval	Default	1.0s

	Setting range	0.1s～100.0s

Waiting time from converter fault alarm to fault auto reset

Fb.11	Input phase shortage and contactor protection selection	Default	11
	Setting range	Unit's digit: Input phase shortage protection Ten's digit : Contactor suction protection 0:Prohibit 1: Permit	

Choose whether to protect input phase shortage or contactor suction.

T510 converter input phase shortage/contactor suction protection initial model to see table below:

Voltage grade	Input phase shortage/contactor suction protection initial model
Single phase 220V	No
Three phase 220V	11kw G type
Three phase 380V	18.5kw G type

T510 frequency converter has input phase shortage protection only if the above starting power and above, and contactor suction function. No input phase shortage and contactor suction protection function can be found in the following power section, no matter Fb.11 is set to 0 or 1.

Fb.12	Selection of output phase shortage protection	Default	1
	Setting range	0: Prohibit 1:Permit	

Choose whether to protect the output phase shortage.

Fb.13	Faults protection action selection 1	Default	00000
	Setting range	Unit's digit	Motor overload (E11)
		0	Coast to stop
		1	Stop by shutdown mode
		2	Continue operation
		Ten's digit	Input phase shortage (E012) (same bit)
		Hundred's digit	Input phase shortage (E013) (same bit)
		Thousand's digit	External fault (E015) (same bit)
		Ten thousand's digit	Communication abnormal (E016) (same bit)
Fb.14	Faults protection action selection 2	Default	00000
	Setting range	Unit's digit	Reserved
		0	Coast to stop
		1	Switch to V/F and stop by shutdown mode
		2	Switch to V/F and continue running
		Ten's digit	Functional code read-write abnormality (E021)

		0	Coast to stop
		1	Stop by shutdown mode
		Hundred's digit	Reserved
		Thousand's digit	Reserved
		Ten thousand's digit	Reserved
Fb.15	Faults protection action selection 3	Default	
	Setting range	Unit's digit	User-defined Fault 1 (E027) (same Fb.13 bit)
		Ten's digit	User-defined Fault 2 (E028) (same Fb.13 bit)
		Hundred's digit	Power-on time arrival(E029) (same Fb.13 bit)
		Thousand's digit	No load (E030)
		0	Coast to stop
		1	Stop by shutdown mode
		2	Jump directly to 7% of the rated frequency of the motor and continue to operate, and automatically restore to the set frequency without loss of load.
		Ten thousand's digit	Runtime PID feedback loss (E031) (same Fb. 13 bit)

When "Free shutdown" is selected, the converter displays E0** and stops directly.

When choosing "shutdown mode", the converter displays A ** and shutdown mode, and E0 ** after shutdown.

When "continue running" is selected, the frequency converter continues to run and shows A**, the frequency of operation is set by Fb.20.

Fb.20	Frequency selection for continuing operation in Faults		Default	0
	Setting range	0	Running at current operating frequency	
		1	Running at setting frequency	
		2	Running at upper limit frequency	
		3	Running at lower limit frequency	
		4	Running at abnormal reserve frequency	
Fb.21	Abnormal reserve frequency		Default	100.0%
	Setting range		0.0%～100.0%(maximum frequency)	

When a fault occurs during the operation of the converter, and the fault treatment mode is set to continue running, the converter displays A** and runs at the frequency determined by Fb.20.

When an abnormal reserve frequency is selected, the value set by Fb.21 is the percentage relative to the maximum frequency.

Fb.26	Instantaneous power off selection		Default	0
	Setting range	0	Invalid	
		1	Deceleration	
		2	Deceleration shutdown	
Fb.27	Judging voltage by pause of instantaneous stop operation		Default	90.0%
	Setting range		80.0%～100.0%	
Fb.28	Judging time by instantaneous blackout voltage rise		Default	0.50s
	Setting range		0.00s～100.00s	
Fb.29	Judging voltage by instantaneous stop operation		Default	80.0%
	Setting range		60.0%～100.0%（standard bus voltage）	

This function means that when the power is cut off or the voltage suddenly decreases, the converter can compensate the reduction of DC bus voltage of the converter by reducing the output speed of the converter, so as to maintain the operation of the converter.

If Fb.26=1, the converter decelerates when power failure occurs or voltage suddenly decreases. When bus voltage returns to normal, the converter accelerates to set frequency. The criterion to judge the bus voltage returning to normal is that the bus voltage is normal and lasts longer than the set time of Fb.28.

If Fb. 26 = 2, the converter will slow down until it stops when the power is cut off or the voltage suddenly drops.

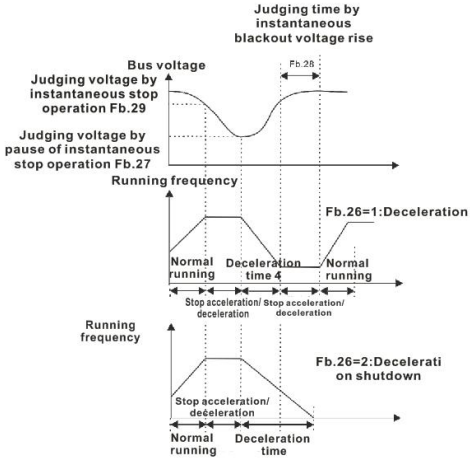

Figure 6-27 Diagram of instantaneous shutdown

Fb.30	No load protection selection		Default	0
	Setting range	0	Invalid	
		1	Valid	
Fb.31	No load detection level		Default	10.0%
	Setting range		0.0%～100.0%（motor rated current）	
Fb.32	No load detection time		Default	1.0s
	Setting range		0.0s～60.0s	

If no load protection function is effective, when the output current of the converter is less than the detection level Fb.31 and the duration is longer than the detection time Fb.32, the output frequency of the converter will automatically be reduced to 7% of the rated frequency. During no load protection, if the load is restored, the frequency converter automatically restores to run at the set frequency.

Group FC Fault recording

FC.00	Previous fault type (last)	0～99
FC.01	The first and second faults types	
FC.02	The first three faults types	

FC.03	The first four faults types	
FC.04	The first five faults types	
FC.05	The first six faults type	

Record the latest three failure types of the converter, 0 is fault-free. For the possible causes and solutions of each fault code, please refer to the relevant instructions in Chapter 8.

FC.06	Previous (last) fault frequency .	The last fault frequency
FC.07	Previous (most recent) fault current	The last fault current
FC.08	Previous (most recent) fault bus voltage	The last fault bus voltage
FC.09	Previous (last) fault input terminal status	The state of the digital input terminal at the last failure is in the following order: BIT9 BIT8 BIT7 BIT6 BIT5 BIT4 BIT3 BIT2 BIT1 BIT0 X10 X9 X8 X7 X6 X5 X4 X3 X2 X1 When the input terminal is ON and its corresponding secondary bit is 1 and OFF is 0, the state of all X is converted to decimal number display.
FC.10	Previous (last) fault output terminal status	The state of all output terminals at the last failure, in the order of: BIT4 BIT3 BIT2 BIT1 BIT0 Y2 Y1 REL2 REL1 DOP When the input terminal is ON and its corresponding secondary bit is 1 and OFF is 0, the state of all X is converted to decimal EL1 system display.
FC.11	Previous (last) fault converter status	Reserved
FC.12	Previous (last) fault power-on time	The current power-on time at the latest fault
FC.13	Running time during the previous (last) fault	The current running time at the latest fault
FC.14	Inverter module radiator temperature during the previous (last) fault	
FC.16	First and second faults frequency	Same FC.06-FC.14
FC.17	First and second faults current	
FC.18	First and second faults bus voltage	
FC.19	Input terminal state during the	

	first and second failure	
FC.20	The first and second faults output terminal	
FC.21	The first and second faults converter status	
FC.22	The first and second faults power-on time	
FC.23	The first and second faults running time	
FC.24	The first and second faults inverter radiator temperature	
FC.26	The first three faults	
FC.27	The first three faults current	
FC.28	The first three faults bus voltage	
FC.29	The first three faults input terminal status	
FC.30	The first three faults output terminal	
FC.31	The first three faults converter status	
FC.32	The first three faults power-on time	
FC.33	The first three faults running time	
FC.34	The first three faults inverter radiator temperature	

Group FD communication parameters

Group FE custom function code

This set of function codes is a user-customized parameter group.

Users can select the required parameters from all T600 function codes and aggregate them into the FE group as user-customized parameters for easy viewing and modification.

The FE group provides up to 32 customized parameters, and the display value of the FE group parameters is F0.00, which means that the user function code is empty.

When entering the user customized parameter mode, the display function codes are defined by FE.00-FE.31, and the sequence is the same as that of FE group function codes, while F0.00 is skipped.

Group A0 second motor control

Slightly

Group L0 monitoring parameter group

L0 parameter group is used to monitor the operation status information of frequency converter. Customers can view it through the panel to facilitate on-site debugging. They can also read the value of parameter group through communication to monitor the upper computer.

Communication address is 0 *7000~0 *7040

Among them, L0.00-L0.31 is the operation and shutdown monitoring parameters defined in F7.02-F7.09 and F7.12-F7.15.

Specific parameter function codes, parameter names and minimum units are shown in Table 5-2.

L0.00	Running frequency	Setting range	0.00～320.00Hz(F0.11=2) 0.0～3200.0Hz(F0.11=1)
L0.01	Setting frequency		

Display the absolute value of the theoretical operating frequency and setting Frequency of converter

The actual output frequency of the converter is L0.19.

L0.02	Bus voltage	Display range	0.0V～3000.0V

Display bus voltage value of frequency converter

L0.03	Output voltage	Display rang	0.0V～1140V

Display output voltage of frequency converter in operation

L0.04	Output current	Display range	0.00A～655.35A(converter<=55KW) 0.0A～6553.5A(Converter rate>55kw)

Display output current value of the frequency converter in operation

L0.05	Output power	Display range	0.0～3276.7

Display the output power value of frequency converter in operation

L0.06	Output torque	Display range	-200.0%～200.0%

Display torque value of frequency converter in operation

L0.07	X input status	Display range	0～32767

Displays the current X terminal input status value. After converting into binary data, each bit corresponds to an X input signal, which means that the input is a high-level signal, and 0 means that the input is a low-level signal. The corresponding relationship between each bit and input terminal is as follows:

Bit0	Bit1	Bit2	Bit3
X1	X2	X3	X4
Bit4	Bit5	Bit6	Bit7
X5	X6	X7	X8
Bit8	Bit9	Bit10	Bit11
X9	X10	X11	X12
Bit12	Bit13	Bit14	Bit15
X13	X14	X15	

L0.08	Y output status	Display range	0～1023

Displays the current Y terminal output status value. When converted into binary data, each bit corresponds to a Y signal, which is 1 for the high level of the output and 0 for the low level of the output. The corresponding relationship between each bit and the output terminal is as follows:

Bit 0	Bit 1	Bit 2	Bit 3
DO	Relay 1	Relay 2	Y1
Bit 4	Bit 5	Bit 6	Bit 7
Y 2	Y 3	Retain	Retain
Bit 8	Bit 9	Bit 10	Bit 11
Retain	Retain	Retain	Retain

L0.09	AI1 voltage (V)	Display range	0.00V～10.57V
L0.10	AI2 voltage (V)	Display range	0.00V～10.57V
L0.11	Panel potentiometer	Display range	-10.57V～10.57V

AI1, AI2 sampling data display unit is voltage (V).

When F5.00 and F5.06 are set to 1, the corresponding current of AI1 and AI2 is 0.00-10.57 and 0.00-21.14 (mA).

L0.12	Count value	Display range	0～65535
L0.13	Length value	Display range	0～65535
L0.14	Load speed display	Display range	0～65535

The display values are described in F7.22 and F7.23.

L0.15	PID setting	Display range	0.00～655.35Mpa
L0.16	PID feedback	Display range	0.00～655.35Mpa
L0.18	PULSE input pulse frequency	Display range	0.00kHz～100.00kHz

Display X5 high-speed pulse sampling frequency, minimum unit is 0.01kHz

L0.19	Feedback speed	Display range	-320.00Hz～320.00Hz(F0.11=2) -3200.0Hz～3200.0Hz(F0.11=1)

Display the actual output frequency of the converter

When F0.11 (frequency instruction resolution) is 1, the display range is - 3200.00 Hz～3200.0 Hz.

When F0.11 (frequency instruction resolution) is 2, the display range is - 320.00Hz～320.00Hz.

L0.20	Remaining run time	Display range	0.0min～6553.5min.

Display timing run time, remaining run time

Introduction of timing operation see introduction of parameters F8.32~F8.34

L0.21	AI1 pre-correction voltage	Display range	0.00V～10.57V
L0.22	AI2 pre-correction voltage	Display range	0.00V～10.57V
L0.23	Pre-correction voltage of panel potentiometer	Display range	-10.57V～10.57V

Display the actual value of analog input sampling voltage.

The actual voltage used has been linearly corrected to reduce the deviation between the sampling voltage and the actual input voltage.

The actual calibration voltages are L0.09, L0.10 and L0.11.

L0.24	Linear speed	Display range	0～65535meter/min.

Display the linear speed of X-high-speed pulse sampling in meters per minute

According to the number of actual sample pulses per minute and FA.59 (number of pulses per meter), the linear velocity is calculated.

L0.27	PULSE input pulse frequency	Display range	0～65535Hz

Display the sampling frequency of X5 high-speed pulse in 1Hz. It's the same data as L0.18, just different from the units displayed.

L0.28	Communication settings	Display range	-100.00%～100.00%

Display data written through communication address 0 *1000

L0.30	Main frequency X display	Display range	0.00Hz～320.00Hz(F0.11=2) 0.0Hz～3200.0Hz(F0.11=1)

Display main frequency instruction frequency setting

When F0.11 (frequency instruction resolution) is 1, the display range is - 3200.0Hz to 3200.0Hz.

When F0.11 (frequency instruction resolution) is 2, the display range is - 320.00Hz ~ 320.00Hz.

L0.31	Auxiliary frequency Y display	Display range	0.00Hz～320.00Hz(F0.11=2) 0.0Hz～3200.0Hz(F0.11=1)

Display auxiliary frequency instruction frequency setting

When F0.11 (frequency instruction resolution) is 1, the display range is - 3200.0Hz to 3200.0Hz.

When F0.11 (frequency instruction resolution) is 2, the display range is - 320.00Hz ~ 320.00Hz.

L0.35	Target torque	Display range	-200.0%～200.0%

Display the current torque upper limit setting

L0.37	Power factor angle	Display range	0.1°

Display the power factor angle of the current operation

L0.39	V/F separation target voltage	Display range	0V～motor rated voltage
L0.40	V/F separation output voltage	Display range	0V～motor rated voltage

Display target output voltage and current actual output voltage when running in V/F separate state

V/F separation see Group F3 related introduction

L0.41	X input state visual display	Display range	-

X terminal state visual display , the display format is as follows:

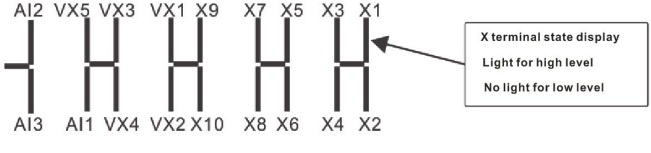

L0.42	Y input state visual display	Display range	-

Y terminal state visual display , the display format is as follows:

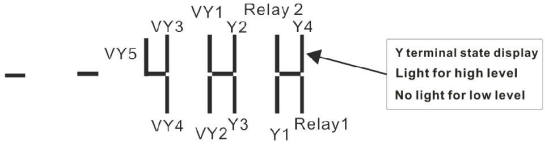

L0.43	X function state visual display 1	Display range	-

Whether if visual display terminal function 1-40 valid

There are five digital tubes in the keyboard. Each digital tube display can represent eight functions. The definition of digital tube is as follows:

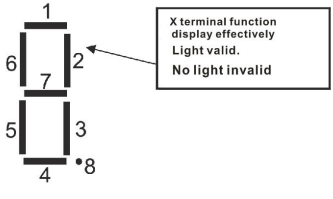

Digital tubes represent functions 1-8, 9-16, 17-24, 25-32 and 33-40 from right to left, respectively.

L0.44	X terminal function display	Display	-

	effectively	range	

Whether if visual display terminal function 41-59 valid

The display mode is similar to L0.43

Digital tubes represent functions 41-48, 49-56, 57-59 from right to left, respectively.

L0.59	Setting frequency	Display range	-100.00%～100.00%
L0.60	Running frequency	Display range	-100.00%～100.00%

Display the current set frequency and operation frequency, 100.00% for the maximum frequency of the converter

L0.61	Converter running status	Display range	0～65535-

Display the running status information of frequency converter

The data definition format is as follows:

L0.61	Bit0	0: Shutdown; 1: Forward; 2: Reverse
	Bit1	
	Bit2	0: Constant speed; 1: Acceleration; 2: Deceleration
	Bit3	
	Bit4	0: Bus voltage normal; 1: Undervoltage

L0.62	Current fault code	Display range	0～99

Display current fault Cod

Chapter 7 EMC (Electromagnetic Compatibility)

7.1 Definition

Electromagnetic compatibility (EMC) refers to the ability of electrical equipment to operate in the environment of electromagnetic interference, not to interfere with the electromagnetic environment, and to realize its function stably.

7.2 Introduction to EMC Standards

According to the requirements of national standard GB/T12668.3, the converter should meet the requirements of electromagnetic interference and anti-electromagnetic interference. IEC/EN61800-3:2004 (Adjustable speed electric power drive systems Part 3: EMC requirements and specific test methods, equivalent to the national standard GB/T12668.3. IEC/EN61800-3 mainly investigates the frequency converter from two aspects of electromagnetic interference and anti-electromagnetic interference. The electromagnetic interference mainly tests the radiation interference, conduction interference and harmonic interference of the frequency converter (which is required for the civil frequency converter). The main anti-EMI measures are conduction immunity, radiation immunity, surge immunity, fast mutation impulse group immunity, ESD immunity and power supply low-frequency terminal immunity (specific test items are: 1) input voltage sag, interruption and change immunity test; 2) phase-switching gap immunity test; 3) harmonic transmission; Input immunity test; 4. Input frequency change test; 5. Input voltage unbalance test; 6. Input voltage fluctuation test). According to the strict requirements of IEC/EN61800-3 mentioned above, our products are installed and used according to the instructions shown in 7.3, which will have good electromagnetic compatibility in general industrial environment.

7.3 EMC guidance

7.3.1 Harmonic effects:

High-order harmonic of power supply will cause damage to frequency converter. Therefore, in some places where the quality of power grid is poor, it is suggested to install AC input reactor.

7.3.2 EMI and installation precautions:

There are two kinds of electromagnetic interference, one is the interference of the electromagnetic noise of the surrounding environment to the frequency converter, the other is the interference of the frequency converter to the surrounding equipment.

Installation Notes:

1) The grounding wires of frequency converters and other electrical products should be well grounded.

2) The power input and output power lines and weak current signal lines (such as control lines) of the frequency converter should not be arranged in parallel as far as possible, but vertically when conditions permit.

3) Shielded cable or steel tube shielded power line is recommended for the output power line of frequency converter, and the shielding layer should be grounded reliably. The twisted pair shielded control line is recommended for the lead of disturbed equipment, and the shielding layer should be grounded reliably.

4) When the length of motor cable exceeds 100 m, it is required to install output filter or reactor.

7.3.3 Processing method of interference of peripheral electromagnetic equipment to frequency converter:

Generally, the reason for the electromagnetic effect on the converter is that there are a large number of relays, contactors or electromagnetic brakes installed near the converter. When the frequency converter is disturbed and misoperated, the following methods are recommended to solve the problem:

1) Surge suppressor is installed on the device which produces interference.

2) The input end of the converter is equipped with a filter, which is operated with reference to 7.3.6.

3) The shielded cable is used for the control signal line and the detection line of the frequency converter, and the shielded layer is grounded reliably.

7.3.4 Frequency Converter to the peripheral equipment interference treatment methods:

This part of the noise is divided into two kinds: one is the radiation interference of the converter, and the other is the conduction interference of the converter. These two kinds of interference make peripheral electrical equipment subject to electromagnetic or static induction. Then, the equipment has been misoperated. In view of several different interference situations, the following methods are used to solve the problem:

1) Instruments, receivers and sensors used for measurement are generally weak. If the frequency converter is close to each other or in the same control cabinet, they are susceptible to interference and misoperation, the following solutions are suggested: stay away from the interference source as far as possible; do not arrange the signal line parallel to the power line, especially not tie them equally. Together, shielded cables for signal and power lines are well grounded. Ferrite magnetic rings are added to the output side of the converter (the selective suppression frequency is in the range of 30-1000MHz) and wound around 2-3 turns. For bad conditions, EMC output filters can be installed.

2) When the interfered equipment and the converter use the same power supply, they cause conduction interference. If the above methods can not eliminate the interference, EMC filters should be installed between the converter and the power supply (refer to 7.3.6 for type selection operation).

3) Peripheral equipment grounding alone can eliminate the interference caused by leakage current of grounding wire of frequency converter when grounding in common ground.

7.3.5 Leakage current and treatment:

There are two forms of leakage current when using frequency converter: one is the leakage current to the ground, the other is the leakage current between the line and the line.

1) The factors affecting the ground leakage current and the solutions:

Distributed capacitance exists between conductor and earth. The larger the distributed capacitance is, the larger the leakage current is. It can effectively reduce the distance between converter and motor to reduce the distributed capacitance. The larger the carrier frequency is, the larger the leakage current is. It can reduce carrier frequency to reduce leakage current.

However, reducing carrier frequency will lead to increased motor noise. Please note that adding reactor is also an effective way to solve leakage current.

Leakage current will increase with the increase of loop current, so when the motor power is high, the corresponding leakage current is high.

2) The factors causing leakage current between wires and their solutions:

Distributed capacitance exists between the output wiring of the frequency converter. If the current passing through the line contains high-order harmonics, it may cause resonance and generate leakage current. At this time, the use of thermal relays may cause them to act incorrectly. The solution is to reduce carrier frequency or install output reactor. It is suggested that no thermal relay should be installed before the motor is used, and the electronic overcurrent protection function of the frequency converter should be used.

7.3.6 Notes for power supply input end installing EMC input filter:

1) Note: Use the filter strictly according to the rated value; because the filter belongs to Class I electrical appliances, the metal enclosure of the filter should be in good contact with the metal enclosure of the installation cabinet in a large area, and good conductivity continuity is required, otherwise there will be electric shock danger and seriously affect the EMC effect; EMC test shows that the filter enclosure should be in good contact with the metal enclosure of the installation cabinet. Necessity and change

2) Frequency converter PE ends are connected to the same public ground, otherwise EMC effect will be seriously affected.

3) The filter should be installed as close as possible to the power input of the converter.

7.3.7 Suggestions for correcting common EMC interference problems

Converters belong to strong interference equipment. When there are problems in wiring and grounding, there may still be interference. When there is interference with other equipment, the following methods can be used to rectify it.

Table 7-4 Common EMC interference problems and treatment methods

Interference Types	Troubleshooting
Leakage protection switch tripping	◆Motor housing connected to drive PE end ◆Driver PE terminal connected to power grid PE ◆Input power cord plus safety gauge capacitor box ◆Wrapping magnetic ring on input drive line
Driver running causes interference	◆Motor housing connected to drive PE end ◆Driver PE terminal connected to power grid PE ◆Input power cord with safety gauge capacitor box and winding magnetic ring ◆Capacitance or magnetic winding on the jammed signal port ◆Common connection between equipment
Communication interference	◆Motor housing connected to drive PE end ◆Driver PE terminal connected to power grid PE ◆Input power cord with safety gauge capacitor box and winding magnetic ring ◆Communication line source and load end plus matching motor ◆Communication Line plus Public Ground Line ◆Shielding line for communication line, shielding layer connected to communication common
I/O Interference	◆Low-speed X enlarges capacitance filtering and suggests a maximum of 0.1Uf ◆AI enlarges capacity filtering, and suggests a maximum 0.22uF

Chapter 8 Troubleshooting and Countermeasures

8.1 Fault alarm and countermeasures

T510 series frequency converter has 51 warning information and protection functions. Once abnormal fault occurs, protection function action, frequency converter stop output, frequency converter fault relay contact action, and display fault code on the frequency converter display panel. Before seeking service, users can check themselves according to the tips in this section, analyze the causes of the failure and find out the solutions. If this is the reason stated in the dashed wire frame, please seek service, contact the agent of the converter you purchased or directly with our company.

Fault Name	Operation Panel Display	Possible Causes	Solutions
Inverter unit protection	E001	1. The output circuit is grounded or short circuited 2. The connecting cable is too long 3. Module overheating 4. Loose internal wiring 5. Abnormal main control board 6. Drive board abnormality 7. Inverter module anomaly	1. Eliminating Peripheral Faults 2. Install reactor or output filter 3. Check the air duct and the cooling fan. 4. Connect all cables properly 5. Connect the agent or Tetran 6. Connect the agent or Tetran 7. Connect the agent or Tetran
Accelerated overcurrent	E002	1. Grounding or short circuit of the output circuit 2. The control mode is vector without parameter identification. 3. Acceleration time is too short 4. Inappropriate manual torque lifting or V/F curve 5. Low voltage 6. Start the rotating motor 7. Sudden load during acceleration 8. Converter selection is too small	1. Eliminating peripheral faults 2. Identification of motor parameters 3. Increase the acceleration time 4. Adjusting manual lifting torque or V/F curve 5. Adjust the voltage to normal range 6. Select speed tracking start or restart after the motor stops 7. Cancel sudden load 8. Choosing converter with higher power level
Decelerated overcurrent	E003	1. Grounding or short circuit of the output circuit 2. The control mode is vector without parameter identification. 3. The deceleration time is too short 4. Low voltage 5. Sudden load during deceleration 6. No brake unit and brake resistance	1. Eliminating peripheral faults 2. Identification of motor parameters 3. Increase deceleration time 4. Adjust voltage to normal range 5. Cancel sudden load 6. Installation of brake unit and resistor

Constant speed overcurrent	E004	1. Grounding or short circuit of the output circuit 2. The control mode is vector without parameter identification. 3. Low voltage 4. Whether there is sudden load in operation 5. Converter selection is too small	1. Eliminating peripheral faults 2. Identification of motor parameters 3. Adjust the voltage to normal range 4. Cancel sudden load 5. Choosing converter with higher power level
Accelerated overvoltage	E005	1. High input voltage 2. Existing external force driving motor operation in acceleration process 3. Acceleration time is too short 4. No brake unit and brake resistance	1. Adjust the voltage to normal range 2. Cancel additional power or install brake resistance 3. Increase the acceleration time 4. Installing brake unit and resistor
Decelerated overvoltage	E006	1. High input voltage 2. Existing external force driving motor operation in deceleration process 3. Too short deceleration time 4. Brake unit and brake resistance	1. Adjust the voltage to normal range 2. Cancel additional power or install brake resistance 3. Increase deceleration time 4. Installing Brake Unit and Resistor
Constant speed overvoltage	E007	1. High input voltage 2. Existing external force driving motor operation in operation process	1. Adjust the voltage to normal range 2. Cancel additional power or install brake resistance
Control power fault	E008	1. The input voltage is not within the range specified in the code.	1.Adjust the voltage to normal range
Undervoltage fault	E009	1. Instantaneous blackout 2. Input voltage is not within the scope of specifications 3. Abnormal bus voltage 4. Abnormal rectifier bridge and buffer resistance 5. Abnormal driving board 6. Abnormal control board	1. Reset the fault 2. Adjust voltage to normal range 3.Connect the agent or Tetran 4.Connect the agent or Tetran 5.Connect the agent or Tetran 6.Connect the agent or Tetran
Converter overload	E010	1. Whether the load is too heavy or the motor is blocked 2. Converter selection is too small	1. Load reduction and checking motor mechanical condition 2. Selecting converter with higher power level
Motor overload	E011	1. Motor protection parameter Fb.01 is set inappropriate. 2.The load is too heavy or the motor is blocked 3. Converter selection is too small	1. Setting this parameter correctly 2. Load reduction and inspection of motor and machinery 3. Choosing converter with high higher power level
Input phase shortage	E012	1. Abnormal three-phase input power supply 2. Drive board abnormality 3. Abnormal lightning protection plate 4. Abnormal main control board	1. Check and eliminate problems in peripheral lines 2.Connect the agent or Tetran 3.Connect the agent or Tetran 4.Connect the agent or Tetran

Output phase shortage	E013	1. The lead from the frequency converter to the motor is abnormal. 2. Three-phase output unbalance of frequency converter during motor operation 3. Drive board abnormality 4. Module exception	1. Eliminating peripheral faults 2. Check whether the three-phase winding of the motor is normal and remove the fault 3.Connect the agent or Tetran 4.Connect the agent or Tetran
Module overheat	E014	1. Excessive ambient temperature 2. Air duct blockage 3. Fan damage 4. Module thermistor damage 5. Damage of inverter module	1. Reducing environmental temperature 2. Clean up the air duct 3. Replace the damaged fan 4. Replace thermistor 5. Replace inverter module
External equipment failure	E015	1. Input signal of external fault through multi-functional X terminal 2. Input signal of external fault through virtual IO function	1.Reset the operation 2.Reset the operation
Communication fault	E016	1. The host computer is in abnormal state. 2. Abnormal communication lines 3. Correct setting of communication parameters group Fd	1. Check the cabling of host computer 2. Check the communication connection 3. Correct setting of communication parameters
Contactor fault	E017	1. Abnormal driving board and power supply 2. Contactor abnormality	1. Replace drive board or power board 2. Replace contactors
Current detection fault	E018	1. Check hall device abnormality 2. Drive board abnormality	1. Replace hall devices 2. Replace drive board
Motor self-learning fault	E019	1. Motor parameters are not set according to nameplate 2.Parameter identification process time-out	1. Setting motor parameters correctly according to nameplate 2. Check the frequency converter to the motor lead
Encoder failure	E020	1. Type mismatch of encoder 2. Encoder connection error 3. Encoder damage 4. Abnormal PG card	1. Setting the encoder type correctly according to practice 2. Troubleshooting of line faults 3. Replace encoder 4. Replace PG card
EEPROM read- write fault	E021	1.EEPROM chip damage	1. Replace master control board
Converter hardware fault	E022	1. Overpressure exist 2. Overcurrent exist	1. Dealing with overvoltage fault 2. Dealing with overcurrent fault
Short circuit to ground fault	E023	The motor is short circuit to ground	Replace cable or motor

User-defined fault 1	E027	1. Input the user-defined fault 1 signal through multi-functional terminal X 2. Input the user-defined fault 1 signal through the virtual IO function	1.Reset the operation 2.Reset the operation
User-defined fault 2	E028	1. Input the user-defined fault 2 signal through multi-functional terminal X 2. Input the user-defined fault 2 signal through the virtual IO function	1.Reset the operation 2.Reset the operation
Accumulated power-on time to failure	E029	Accumulated power-on time to the setting value	1. Clear the record through parameter initialization function
No load fault	E030	1.Converter running current is lower than Fb.31.	1. Check the load is disconnected or the parameters of Fb.31 and Fb.32 meet the actual operating conditions.
PID feedback lost during running	E031	PID feedback is lower than F9.26 setting value	Check PID feedback signal or set F9.26 to a proper value
Pulse to pulse current limit fault	E040	1. Whether the load is too heavy or the motor is blocked 2. Converter selection is too small	1. Reduce the load and check the motor and mechanical condition 2. Choose a converter with higher power level
Motor switchover fault during running	E041	1. Change the current motor selection through terminals during the operation of frequency converter	1. Motor switching operation after frequency converter shutdown
Too large speed deviation	E042	1. Incorrect setting of encoder parameters 2. No parameter identification 3. The unreasonable setting of detection parameters with too large velocity deviation	1. Correct setting of encoder parameters 2. Identification of motor parameters 3. Reasonable setting of detection parameters according to actual conditions
Motor over-speed fault	E043	1. Incorrect setting of encoder parameters 2. No parameter identification 3. Unreasonable setting of motor overspeed detection parameters	1. Correct setting of encoder parameters 2. Identification of motor parameters 3. Reasonable setting of detection parameters according to actual conditions
Motor overheat	E045	1. Loose wiring of temperature sensor 2. Motor temperature is too high	1. Detecting temperature sensor wiring and troubleshooting 2. Reducing carrier frequency or adopting other heat dissipation measures to heat the motor
Initial position fault	E051	1. The deviation between motor parameters and practice is too large.	Check the correctness of motor parameters, focusing on whether the setting of rated current is too small.

In sleep	SLP	1. Sleep state of constant pressure water supply	1. Normal phenomena, If not, please set sleep-related parameters
Password in protection	-----	Password set-up	Input correct password or contact agent.

Among the 60 warning messages, E022 is the signal of hardware over-current or over-voltage.

In most cases, hardware over-voltage fault causes E022 alarm

8.2 Common faults and solutions

Frequency converter may encounter the following faults in the use process, please refer to the following methods for simple fault analysis:

Table 8-1 Troubleshooting to common faults of converter

SN	Fault	Possible causes	Solutions
1	No display at power-on	The grid voltage is not or too low. Switching power failure on the drive board of frequency converter; Damage of rectifier bridge; Damage of buffer resistance of frequency converter; Control board and keyboard malfunction; The connection between the control board and the driving board and the keyboard is broken.	Check the input power supply; Check bus voltage; Re-connect 8 cores and 32 cores cables Seeking factory service;
2	Display 8.8.8.8.8	The connection between the driving board and the control board is not in good contact. Damage of related devices on the control board; Motor or motor wire has short circuit to ground; Hall fault; The grid voltage is too low.	Re-connect 8 cores and 32 cores cables Seeking factory service;
3	E023 displayed at power-on	Motor or output cable is short-circuited to ground;and converter is damaged.	Measure the insulation of motor and output cable by a megger; seeking factory service;
4	Display normal at power-on,but “8.8.8.8.8” displayed and shutdownimmediately	The fan is damaged or blocked; The wiring of the peripheral control terminal is short-circuited;	Replace fan, eliminate external short circuit fault.
5	E014 (module overheating) fault	Carrier frequency setting is too high. The fan is damaged or the duct is blocked.	Reduce carrier frequency (F0.19). Replace the fan and

	is reported frequently	Internal components of frequency converter are damaged (thermal couple or other)	clean the air duct. Seek factory service.
6	The motor does not rotate after the frequency converter runs.	Check the motor and motor cable; The parameters of frequency converter are set incorrectly (motor parameters); The connection between drive board and control board is not good; Drive board failure;	Ensure the connection between the converter and the motor. Replace the motor or remove mechanical failure. Check and reset the motor parameters.
7	X terminals are disabled	Error setting of parameters. External signal error. PLC and + 24V short joint loosening. Control board failure.	Check and reset the parameters of group F4 . Reconnect the external signal line. Ensure the PLC and + 24V short connector and lock the terminal screw. Seeking factory service.
8	When closed-loop vector control is used, the speed of motor can not be increased.	The code disc is damaged or the connection is wrong. Internal components of converter are damaged.	Replace encoder and reconnect cables Seek factory services
9	Frequency converter frequently reports over-current and over-voltage faults.	Incorrect setting of motor parameters; Incorrect acceleration and deceleration time; Load fluctuation;	Reset motor parameters or self-learning. Set appropriate acceleration and deceleration time. Seek factory services.
10	E017 reported at power-on (or running)	Soft start contactor is not closed or shakes power;	Check whether the contactor cable is loose. Check whether the contactor is faulty. Check contactor 24V power supply failure; Fb.11=00； If the power grid shakes, Fb. 11 = 00; Seeking factory service;

Appendix A: T510 Serial Communication Protocol

T510 series converter provide RS485 communication interface and adopt standard MODBUS communication protocol. Users can achieve centralized control through PC/PLC (setting the operation command of the converter, function code parameters, reading the working status and fault information of the converter), in order to meet the specific use requirements.

1. Agreement Contents

This serial communication protocol defines the content and format of information transmitted in serial communication. These include: host polling (or broadcasting) format; host coding method, including: the function code required action, transmission data and error checking. The slave machine responds with the same structure, including action confirmation, return data and error checking. If the slave machine makes an error in receiving information or fails to complete the action required by the host, it will organize a fault information as a response feedback to the host.

2. In application

The converter is connected to the PC/PLC control network with RS485 bus.

Multiprocessor applications:

In practical application, chrysanthemum joining method and star joining method are generally used.

RS485 Industrial Bus Standard requires chrysanthemum chain connection between devices, and 120_terminal resistance must be connected at both ends, as shown in Figure B-1. Figure B-2 is a simplified wiring diagram. Figure B-3 shows the actual application.

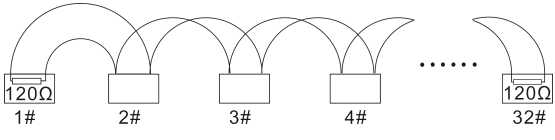

Fig. B-1 Chrysanthemum connection field wiring diagram

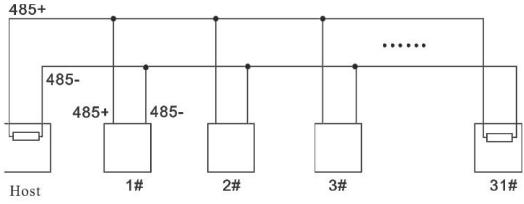

Figure B-2 Chrysanthemum simplified wiring diagram

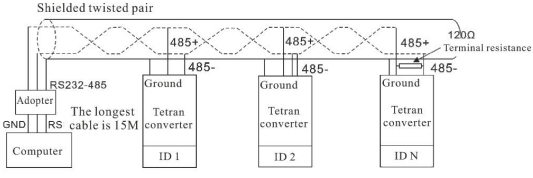

Figure B-3 Chrysanthemum connection application

Figure B-4 A star-shaped connection pattern. At this point, the two devices farthest from the line (1 # and 15 # devices),the terminal resistors must be connected.

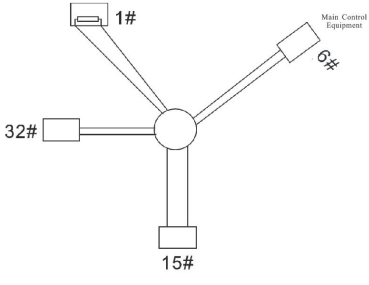

Figure B-4 Star-shaped connection

Shielding wire should be used as far as possible in multiprocessor connection. The basic parameters such as baud rate and data bit check of all devices on RS485 line must be consistent, and the address must not be duplicated.

3. Bus structure

(1) Interface mode

RS485 Hardware Interface

(2) Transmission mode

Asynchronous serial, half duplex transmission mode. At the same time, only one host and slave can send data while the other can only receive data. In the process of serial asynchronous communication, data is sent frame by frame in the form of message.

(3) Topological structure

Single host and multi slave system. The slave address range is from 1～ 247, and 0 is the broadcasting communication address. The slave address in the network must be unique.

4. Protocol description

T600 Series frequency converter communication protocol is an asynchronous serial master-slave ModBus communication protocol. Only one device (host) in the network can establish the protocol (called "query/command"). Other devices (slaves) can only respond to the "query/command" of the host by providing data, or act accordingly according to the "query/command" of the host. Host refers to personal computer (PC), industrial control equipment or programmable logic controller (PLC), slave refers to T600 frequency converter. The host can not only communicate with a slave computer alone, but also distribute broadcast information to all slaves. For the query/command of the host accessed separately, the slave machine returns a message (called response). For the broadcast message sent by the host, the slave machine does not need feedback to respond to the host.

5. Communication data structure

T600 series converters' ModBus protocol communication data format as follows:

In RTU mode, message sending starts at a pause interval of at least 3.5 characters. This is the easiest way to achieve multiple character times at network baud rate (as shown in

T1-T2-T3-T4 below). The first domain of transmission is the device address. The transmission characters that can be used are hexadecimal 0... 9, A... F. Network devices continuously detect network buses, including pause intervals. When the first domain (address domain) is received, each device decodes to determine whether it is sent to itself. After the last transfer character, a pause of at least 3.5 character time marks the end of the message. A new message can begin after this pause. The entire message frame must be transported as a continuous stream. If there is a pause time of more than 1.5 characters before the frame is completed, the receiving device will refresh incomplete messages and assume that the next byte is the address domain of a new message. Similarly, if a new message starts with the previous message in less than 3.5 characters, the receiving device will consider it a continuation of the previous message. This will result in an error, because the final CRC field value cannot be correct.

RTU frame format:

Frame head START	3.5 character time
Slave address ADR	Communication address:1～247
Command code CMD	03: Read slave parameters; 06: Write slave parameters
DATA（N-1）	Data content: function code parameter address, number of function code parameters, function code Parameter value, etc.
DATA（N-2）	
……	
DATA0	
CRC CHK high level	Detection value: CRC value
CRC CHK low level	
END	3.5 character time

CMD (command directive) and DATA (data word description)

Command code: 03H, read N words (up to 12 words)

For example, reading function code parameters F0.08 and F0.09, starting address F008H of frequency converter with slave address 01, continuous reading of two values.

Host command information

ADR	01H

CMD	03H
Start address high	F0H
Start address low	08H
Registers number high	00H
Registers number low	02H
CRC CHK low	76H
CRC CHK high	C9H

Slave response information

ADR	01H
CMD	03H
Byte number	04H
Data F002H high	13H
Data F002H low	88H
Data F003H high	00H
Data Foo3H low	00H
CRC CHK low	7EH
CRC CHK high	9DH

Command code: 06H, write a word (word)

For example, set F0.10 to 300.00Hz, that is, write 30000 (7530H) to the F00AH address of the slave address 06H converter.

Host command information

ADR	08H
CMD	06H
Data address high	F0H
Data address low	0AH
Data content high	75H
Data content low	30H
CRC CHK low	BCH
CRC CHK high	D5H

Slave response information

ADR	08H
CMD	06H
Data address high	F0H
Data address low	0AH
Data content high	75H
Data content low	30H
CRC CHK low	BCH
CRC CHK high	D5H

- CRC check mode: CRC (Cyclical Redundancy Check)

Using RTU frame format, messages include error detection domains based on CRC method. The CRC domain detects the content of the entire message. The CRC field is two bytes and contains 16-bit binary values. It is computed by the transmission device and added to the message. The receiving device recalculates the CRC of the received message and compares it with the value in the received CRC domain. If the two CRC values are not equal, the transmission is wrong.

CRC first stores in 0xFFFFFF, and then calls a procedure to process the continuous 8-bit bytes in the message with the values in the current register. Only 8 bit data in each character is valid for CRC, and both start and stop bits and parity bits are invalid.

In the CRC generation process, each 8-bit character is different from or (XOR) the contents of the register, and the result moves to the lowest significant bit, and the highest significant bit is filled with 0. LSB is extracted and detected. If LSB is 1, the registers are different from the preset values alone or if LSB is 0, it is not performed. The whole process should be repeated eight times. After the last bit (8th bit) is completed, the next 8th bit byte is either different or different from the current value of the register alone. The value in the final register is the CRC value after all bytes in the message are executed.

When CRC is added to a message, low bytes are added first, then high bytes. The simple functions of CRC are as follows:

unsigned int crc_chk_value(unsigned cF0r *data_value,unsigned cF0r length)

```
{unsigned int crc_value=0xFFFF;int i;while(length--){crc_value^=*data_value++;
for(i=0;i<8;i++){if(crc_value&0x0001){crc_value=(crc_value>>1)^0xa001;}else{crc_value=
crc_value>>1;}}}return(crc_value);}
```

Address definition of communication parameters

This part is the content of communication, which is used to control the operation of the converter, the state of the converter and the setting of related parameters.

Read and write function code parameters (some function codes can not be changed, only for the use of manufacturers):

Address labeling rules with function code group number and label as parameters:

High byte: f0-ff (group F), a0-af (group A), 70-7f (group L)

Low-bit byte: 00-FF

For example, if the range function code F3.12 is to be used, the access address of the function code is expressed as 0 *F30C.

Noted:

Group FF : neither parameters can be read nor changed; L group: only parameters can be read, not changed.

Some parameters can not be changed when the converter is in operation; some parameters can not be changed no matter what state the converter is in; the range, unit and related instructions of parameters should be paid attention to when changing the function code parameters.

Function Code Group Number	Communication Access Address	Communication Modification of Function Code Address in RAM
Group F0～FE	0×F000～0×FEFF	0×0000～0×0EFF
Group A0～AC	0×A000～0×ACFF	0×4000～0×4CFF
Group LO	0×7000～0×70FF	

Noted: as EEPROM is stored frequently, the life-span of EEPROM will be reduced. Therefore, some function codes do not need to be stored in the communication mode, as long as the value in RAM is changed.

If group F parameters are used, the function can be realized by changing the high-bit F of the address of the function code into 0.

If it is a group A parameter, in order to realize this function, only the high bit A of the address of the function code can be changed into 4. The corresponding function code address is as follows:

High-bit byte: 00-0F (group P), 40-4F (group A)

Low-bit byte: 00-FF

Such as:

The function code F3.12 is not stored in EEPROM, and the address is 030C.

The function code A0.05 is not stored in EEPROM, and the address is 4005.

This address means that only write RAM can be done, but not read. When reading, it is an invalid address.

For all parameters, the command code 07H can also be used to achieve this function.

Group F1 : can only read parameters, can not change parameters; some parameters in the operating state of the converter, can not be changed; some parameters, regardless of the state of the converter, can not be changed; change function code parameters, but also pay attention to the scope of parameters, units, and related instructions.

Shutdown/running parameters section:

Parameter Address	Parameter Description	Parameter Address	Parameter Description
1000 H	* Communication setting (decimal) -10000～10000	1010H	PID setting
1001 H	Running frequency	1011 H	PID feedback
1002 H	Bus voltage	1012 H	PLC measure
1003 H	Output voltage	1013 H	PULSE input pulse frequency, unit 0.01 kHz
1004 H	Output current	1014 H	Feedback speed, unit 0.1Hz
1005 H	Output power	1015 H	Remaining runtime
1006 H	Output torque	1016 H	AI1 precorrection voltage
1007 H	Running speed	1017 H	AI2 precorrection voltage
1008 H	X input symbol	1018 H	Panel potentiometer precorrection voltage
1009 H	Y output symbol	1019 H	Linear speed

100A H	AVI voltage	101A H	Present power-on time
100B H	ACI voltage	101B H	Present running time
100C H	Panel potentiometer voltage	101C H	PULSE input pulse frequency,unit 1Hz
100D H	Count value input	101D H	Communication setting value
100E H	Length value input	101E H	Actual feedback speed
100F H	Carried speed	101F H	Main frequency X display
-	-	1020 H	Auxiliary frequency Y display

Noted:

Communication settings are percentages of relative values, 10000 corresponds to 100.00%, and - 10000 corresponds to - 100.00%.

For frequency dimension data, the percentage is the percentage of relative maximum frequency; for torque dimension data, the percentage is F2.10, A0.48 (Torque upper limit digital setting, corresponding to the first and second motors, respectively).

Example 1: The starting address 1002 of the converter which slave address is 01 (Fd.02=001) reads two values continuously (i.e. the bus voltage and output voltage).

Host command information

ADR	01H
CMD	03H
Start address high	10H
Start address low	02H
Registers number high	00H
Registers number low	02H
CRC CHK low	61H
CRC CHK high	0BH

Slave response information

ADR	01H
CMD	03H
Byte number	04H

Data F002H high	11H
Data F002H low	B2H
Data F003H high	00H
Data F003H low	00H
CRC CHK low	5FH
CRC CHK high	28H

Example 2: The converter starting address 1000 with slave address 01 (Fd. 02 = 001) is written to a value 10000 (i.e. setting the given communication frequency as the maximum output frequency).

Host command information

ADR	01H
CMD	06H
Start address high	10H
Start address low	00H
Registers number high	27H
Registers number low	10H
CRC CHK low	97H
CRC CHK high	36H

Slave response information

ADR	01H
CMD	06H
Data address high level	10H
Data address lower level	00H
Data content high level	27H
Data content lower level	10H
CRC CHK low	97H
CRC CHK high	36H

Control command input to frequency converter: (write only)

Command word address	Command function
2000	0001：Forward operation
	0002：Reverse operation
	0003：Forward JOG
	0004：Reverse JOG
	0005：Free shutdown
	0006：Deceleration shutdown
	0007：Fault reset

For example, the frequency converter with the slave address of 01 is running forward (the command channel is given for communication)

Host command information

ADR	01H
CMD	06H
Start address high	20H
Start address low	00H
Registers number high	00H
Registers number low	01H
CRC CHK low	43H
CRC CHK high	CAH

Slave response information

ADR	01H
CMD	06H
Data address high level	20H
Data address lower level	00H
Data content high level	00H
Data content lower level	01H
CRC CHK low	43H
CRC CHK high	CAH

Read converter status: (read only)

Status word address	Status word function
3000	0001：Forward operation
	0002：Reverse operation
	0003：Shut down

Parameter lock password check: (If returned to 8888H, that means password check passed)

Password address	Input password content
F024	****

Digital output terminal control: (write only)

Command address	Command content
2001 H	BIT0：Y1 output control BIT1：Y2 output control BIT2：RELAY1 output control BIT3：RELAY2 output control BIT4：DOR output control BIT5：Y3 BIT6：Retain BIT7：Retain BIT8：Retain BIT9：Retain

Analog output AO1 control: (write only)

Command address	Lock password command content
2002 H	0～7FFF same 0％～100％

Analog output AO2 control: (write only)

Command address	Lock password command content
2003 H	0～7FFF same 0％～100％

High speed pulse (DO) output control: (write only)

Command address	Lock password command content
2004 H	0～7FFFsame 0％～100％

Fault Description

Fault Address	Fault Information	
8000 H	0000: Fault-free 0001: Retain 0002: Acceleration overcurrent 0003: Deceleration overcurrent 0004: Constant speed overcurrent 0005: Acceleration overvoltage 0006: Deceleration overvoltage 0007: Constant speed overvoltage 0008: Buffer resistor overload fault 0009: Undervoltage fault 000A: Converter overload 000B: Motor overload 000c: Input phase shortage 000D: Output phase shortage 000E: Module overheat 000F: External fault 0010: Communication abnormal 0011: Contactor abnormal 0012: Current detection fault 0013: Motor self-learning fault 0014: Encoder/PG card fault 0015: Parameter read-write exception	0016: Frequency converter hardware fault 0017: Motor fault short circuit to ground 0018: Retain 0019: Retain 001A: Retain 001B: User-defined fault 1 001C: User-defined fault 2 001D: Power-on arrival 001E: No load 001F: PID feedback loss during running 0028: Fast current limiting overtime fault 0029: Motor switchover fault 0002A: Excessive speed deviation 002B: Motor overspeed 002D: Motor overheat 005A: Encoder line number set fault 005B: Encoder disconnect 005C: Initial position fault 005E: Speed feedback fault

Communication fault information description data (fault code):

Communication fault address	Fault address description
8001	0000: No fault 0001: Password error 0002: Command code error 0003: CRC check error 0004: Address invalid 0005: Parameter invalid 0006: parameter modification invalid 0007: System locked

6.Group Fd Communication parameters explanation

Fd.00	Baud rate	Default	6005	
	Setting range	Unit’s digit: MODUBS baud rate		
		0：300BPS 1：600BPS 2：1200BPS 3：2400BPS 4：4800BPS	5：9600BPS 6：19200BPS 7：38400BPS 8：57600BPS 9：115200BPS	

This parameter is used to set the data transmission rate between the host computer and the frequency converter. Note that the baud rate set by the host computer and the frequency converter must be the same, otherwise communication can not be carried out. The higher the baud rate, the faster the communication speed.

Fd.01	Data format	Default	0
	Setting range	0: No check: data format < 8, N, 2 > 1: Dual check: data format < 8, E, 1 > 2: Odd check: data format < 8, O, 1 > 3: No check: data format < 8-N-1 >	

The data format set by the host computer and the frequency converter must be the same, otherwise, communication can not be carried out.

Fd.02	Local address	Default	1
	Setting range	1-247, 0 as broadcast address	

When the local address is set to 0, it is the broadcasting address to realize the broadcasting function of the host computer.

Local address has uniqueness (except broadcast address), which is the basis of point-to-point communication between host computer and frequency converter.

Fd.03	Response delay	Default	2ms
	Setting range	0～20ms	

Response delay: refers to the interval between the receipt of converter data and the sending of data to the host computer. If the response delay is less than the system processing time, the response delay is based on the system processing time. If the response delay is longer than the system processing time, the system processing

After completing the data, we have to wait until the response delay time arrives before sending the data to the host computer.

Fd.04	Communication timeout	Default	0.0s
	Setting range	0.0s（invalid）；0.1～60.0s	

When the function code is set to 0.0s, the communication timeout parameter is invalid.

When the function code is set to a valid value, if the interval between the first communication and the next communication exceeds the communication timeout time, the system will report

a communication fault (E016). Normally, it is set to invalid. If the secondary parameters are set in the continuous communication system, the communication status can be monitored.

Fd.05	Communication protocol selection	Default	1
	Setting range	0: Non-standard modbus protocol 1: Standard modobus protocol	

Fd.05 = 1: Select the standard modbus protocol.

Fd.05=0: When reading commands, the number of bytes returned from the machine is one more byte than the standard modbus protocol. See the "5 communication data structure" section of this protocol.

Fd.06	Communication read current resolution	Default	0
	Setting range	0：0.01A；；1：0.1A	

It is used to determine the output unit of the current value when the communication reads the output current.

Appendix C: one drag two water supply card (T600WS6) instructions

T510 series frequency converter 18.5kw above can realize the common constant pressure water supply of one in use, one in use and one standby, providing convenience for customers and reducing costs.

Installations:

(1) Please install the converter when it is completely powered off;

(2) Connect Y1, Y2, Y3, DO and Y1, Y2, Y3 and DO of one or two constant pressure water supply cards on the main control board, such as Y1 to Y1.

(3) T510 series, 18.5kw G and above power section water supply card built-in;

3. One-tow-two water supply expansion card and control terminal and wiring

Item	Terminal Symbol	Name	Function Description
Stem in the control board Y1/Y2/Y3/DO	Y1	To connect control board Y1	The first pump frequency conversion control signal
	Y2	To connect control board Y2	The first pump power frequency control signal
	Y3	To connect control board Y3	The second pump frequency conversion signal
	DO	To connect control board DO	The second power frequency control signal
Relay output	B1-RCM	Relay output normally open terminal,the first pump frequency conversion	1.Contactor control node output 2. Contact capacity: AC380V/3A, DC30V/1A,
	G1-RCM	Relay output normally open terminal,the first pump power frequency	
	B2-RCM	Relay output normally open terminal,the second pump frequency conversion	
	G2-RCM	Relay output normally open terminal,the second pump power frequency	

G1	B1	G2	B2	RCM
PUMP1		PUMP2		RCM

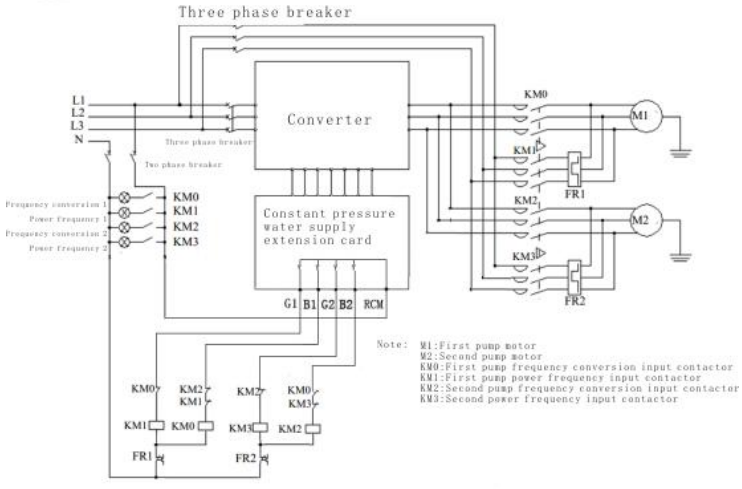

4. Function parameters

See chapter 6 F0 and F9 in details.

5. Examples of application of one-use-one-supplement (one-drag-two-cycle) water supply mode

5.1 Process requirements

(1) One-use-one-supplement (one-drag-two-cycle) water supply mode.

(2) Sleep awakening function, energy saving.

(3) The two pumps are switched regularly to prevent the embroidery of the pump from dying.

5.2 Pump configuration

The secondary water supply system of this building is arranged as follows:

15kw (rated current 32A, rated voltage 380V) converter 1;

5.3 Pressure gauge selection

Remote pressure gauge, DC: 0-10V output, measuring range 1 Mpa.

5.4 Converter selection

T510-4T11G/15PB converter and T600WS6 water supply control card are selected according to the type of frequency conversion pump.

5.5 Parameter setting

Parameter Series Number	Setting Value	Illustrations
F0.02	8	PID closed loop operation control valid
F9.04	1.00	PID given maximum range feedback. If the maximum range of remote pressure gauge is 1 Mpa, this parameter is set to 1.00, and the maximum range of remote pressure gauge is 0.6 Mpa. This parameter is set to 0.60.
F9.36	75.0%	Awakening coefficient (This parameter can not be set without requiring sleep awakening function)
F9.37	Actual determination	Awakening delay time (This parameter can not be set without requiring sleep awakening function)
F9.38	38.00Hz	Sleep frequency (This parameter can not be set without requiring sleep awakening function)
F9.39	Actual determination	Sleep awakening delay time.0 for sleep invalid (This parameter can not be set without requiring sleep awakening function)
F9.42	2	One-drag-two water supply valid(one-use-one-supplement)(This parameter can not be set without requiring sleep awakening function)
F9.43	Actual determination (minutes)	Timing rotation time. 0 as invalid for timing rotation.
Note: Under the monitoring condition, the setting pressure can be adjusted by keyboard UP and DOWN keys. If 0.20 MPa is displayed, the setting pressure can be set to 2 kg.		

6. One-use-one-equipment constant pressure water supply model illustrations

6.1 Process requirements

(1) One-use-one-equipment timing rotation water supply mode.

(2) Sleep awakening function, energy saving.

(3) The two pumps are switched regularly to prevent the pump from rusting.

6.2 Pump configuration

The secondary water supply system of this building is arranged as follows:

5.5 kw (rated current 13A, rated voltage 380V) converter 1;

6.3 Pressure gauge selection

Remote pressure gauge, DC: 0 ~ 10V output, measuring range 1 Mpa.

6.4 Pressure gauge wiring

Pressure gauge connection method, +10V pressure gauge high end, AI1 pressure gauge middle tap, GND pressure gauge low end.

6.5 T600WS6 water supply card wiring

B1-RCM controls the first pump and B2-RCM controls the second pump. (G1, G2 is useless)

6.6 Parameter settings

Parameter Series Number	Setting Value	Illustrations
F0.02	8	PID closed loop operation control valid
F9.04	1.00	PID given maximum range feedback. If the maximum range of remote pressure gauge is 1 Mpa, this parameter is set to 1.00, and the maximum range of remote pressure gauge is 0.6 Mpa. This parameter is set to 0.60.
F9.36	75.0%	Awakening coefficient (This parameter can not be set without requiring sleep awakening function)
F9.37	Actual determination	Awakening delay time (This parameter can not be set without requiring sleep awakening function)
F9.38	38.00Hz	Sleep frequency (This parameter can not be set without requiring sleep awakening function)
F9.39	Actual determination	Sleep awakening delay time.0 for sleep invalid (This parameter can not be set without requiring sleep awakening function)
F9.42	1	One-drag-two water supply valid(one-use-one-supplement)(This parameter can not be set without requiring sleep awakening function)
F9.43	Actual determination (minutes)	Timing rotation time. 0 as invalid for timing rotation.
Note: Under the monitoring condition, the setting pressure can be adjusted by keyboard UP and DOWN keys. If 0.20 MPa is displayed, the setting pressure can be set to 2 kg.		

Warranty Agreement

1. This product is guaranteed for 18 months (based on its barcode information). During the guaranteed period, in accordance with the normal use of the instructions, the product breaks down or damages. Our company is responsible for free maintenance.

2. During the warranty period, due to the following reasons leading to damage, a certain maintenance fee should be charged.

A. Machine damage caused by errors in use and unauthorized repair and modification;

B. Product damage caused by earthquake, fire, geomancy disaster, lightning strike, abnormal voltage or other natural disasters, as well as various human factors;

C. Hardware damage caused by man-made falls and transportation after purchase;

D. Machine damage caused by operation not in accordance with the user manual provided by our company;

E. Failure and damage caused by obstacles other than machines (such as external equipment factors);

F. Unauthorized tearing of product logo (e.g. nameplate);

3. When the product breaks down or damaged, please fill in the contents of "Product Warranty Card" correctly and in detail.

4. The collection of maintenance fees shall be based on the latest revised “Maintenance Price List” from our company.

5. This warranty card will not be reissued under normal circumstances. Please keep this card. The product will be presented to the maintenance personnel during the warranty.

6. If you have any questions in the course of service, please contact our agent or our company in time.

7. The right to interpret the agreement rests with our company.

Customer Service Center

Product warranty card

<table>
<tr><td rowspan="3">Customer information</td><td>Unit address:</td><td></td></tr>
<tr><td rowspan="2">Unit name:
Postal code:</td><td>Contacts:</td></tr>
<tr><td>Contact number:</td></tr>
<tr><td rowspan="3">Product information</td><td colspan="2">Product type:</td></tr>
<tr><td colspan="2">Bar code:</td></tr>
<tr><td colspan="2">Agent Name:</td></tr>
<tr><td>Fault information:</td><td colspan="2">(Maintenance time and contents):

Maintenance man:</td></tr>
</table>

Shenzhen Tetran Electric Technology Co.,Ltd.

T el.:86-755-83263199

Fax.:86-755-27902134

Website:www.tetran.com.cn